B45196L3226K406

Aliases (T495D226K016ZTA1K17280)

Obsolete

B45196L, Tantalum, MnO2 Tantalum, Commercial Grade, 22 uF, 10%, 16 VDC, SMD, Molded, Automotive, 1.1 Ohms, 7343, 3.1mm

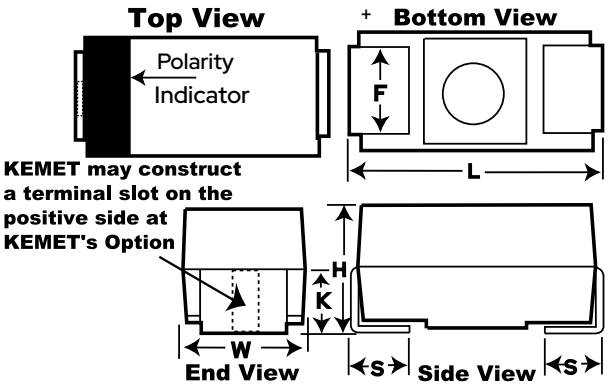

General Information	
Series	B45196L
Dielectric	MnO2 Tantalum
Style	SMD Chip
Description	SMD, Molded, Automotive
Features	Automotive
RoHS	Yes
Termination	Tin
Qualifications	AEC-Q200
AEC-Q200	Yes

Dimensions	
Footprint	7343
L	7.3mm +/-0.3mm
W	4.3mm +/-0.3mm
H	2.8mm +/-0.3mm
S	1.3mm +/-0.3mm
F	2.4mm +/-0.1mm

Packaging Specifications	
Packaging	T&R, 330mm
Packaging Quantity	2800

Specifications	
Capacitance	22 uF
Capacitance Tolerance	10%
Voltage DC	16 VDC (85C), 10.72 VDC (125C)
Temperature Range	-55/+125°C
Rated Temperature	85°C
Dissipation Factor	6%
Failure Rate	N/A
ESR	1.1 Ohms (100kHz)
Ripple Current	129.1 mAmps (25C), 116.2 mAmps (85C), 51.6 mAmps (125C)
Leakage Current	3.5 uA

Statements of suitability for certain applications are based on our knowledge of typical operating conditions for such applications, but are not intended to constitute - and we specifically disclaim - any warranty concerning suitability for a specific customer application or use. This Information is intended for use only by customers who have the requisite experience and capability to determine the correct products for their application. Any technical advice inferred from this Information or otherwise provided by us with reference to the use of our products is given gratis, and we assume no obligation or liability for the advice given or results obtained.

© 2006 - 2024 YAGEO