ESY108M035AL4AA

ESY, Aluminum Electrolytic, 1,000 uF, 20%, 35 VDC, -40/+105°C, 5mm

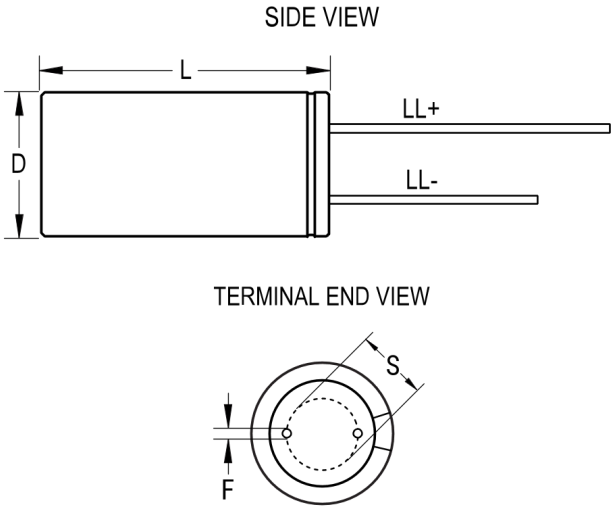

Click here for the 3D model.

Dimensions	
D	13mm +/-0.5mm
L	25mm +2mm
S	5mm +/-0.5mm
LL Negative	15mm MIN
LL Positive	20mm MIN
F	0.6mm NOM

Packaging Specifications	
Packaging	Bulk, Bag

General Information	
Series	ESY
Dielectric	Aluminum Electrolytic
Description	LowZ Single Ended Aluminum Electrolytic
Features	Low Z
RoHS	Yes
Lead	Wire Leads
AEC-Q200	No

Specifications	
Capacitance	1,000 uF
Capacitance Tolerance	20%
Voltage DC	35 VDC, 44 VDC (Surge)
Temperature Range	-40/+105°C
Rated Temperature	105°C
Life	5000 Hrs
Dissipation Factor	12% 120Hz 20C
ESR	0.018 Ohms (100kHz 20C)
Ripple Current	2770 mAmps (100kHz 105C)
Leakage Current	350 uA (2min 20°C)
Impedance Ratio at -25C	2
Impedance Ratio at -40C	3

Statements of suitability for certain applications are based on our knowledge of typical operating conditions for such applications, but are not intended to constitute - and we specifically disclaim - any warranty concerning suitability for a specific customer application or use. This Information is intended for use only by customers who have the requisite experience and capability to determine the correct products for their application. Any technical advice inferred from this Information or otherwise provided by us with reference to the use of our products is given gratis, and we assume no obligation or liability for the advice given or results obtained.

© 2006 - 2024 KEMET