C4BS, 850 – 3,000 VDC/550 – 750 VAC

Overview

The C4BS capacitor is a polypropylene metallized film and polyester double-metallized foil capacitor with a rectangular, plastic box-type design filled with resin. It has a tinned brass lug direct IGBT mounting.

Applications

Typical applications include snubber, clamping, resonance, coupling/decoupling, pulse, and blocking.

Benefits

- Self-healing
- Low loss
- High ripple current
- High contact reliability
- Suitable for high frequency applications

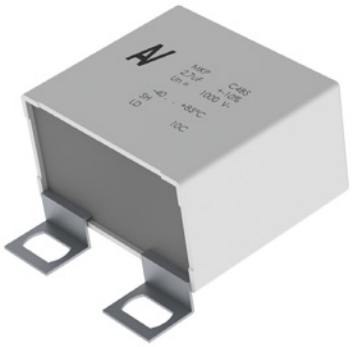

Part Number System

C4	BS	M	B	X	3470	Z	E	E	J
Series	Type	Rated Voltage (VDC)	Case	Lead Specification	Capacitance Code (pF)	Internal Code	Termination Style	Size Code	Tolerance
C4 = MKP Capacitors for Power Applications	BS = Radial box with tab terminals, IGBT application	M = 850 N = 1,000 P = 1,200 W = 2,000 Y = 3,000	B = Plastic box with thermosetting resin sealing	X = Standard	Digits 2-4 indicate the first three digits of the capacitance value. First digit indicates the number of zeros to be added.	Z = Standard	A = Style A B = Style B D = Style D E = Style E F = Style F G = Style G H = Style H M = Style M T = Style T W = Style W X = Style X	See Dimension Table	J = 5% K = 10%

© KEMET Electronics Corporation • One East Broward Boulevard
Fort Lauderdale, FL 33301 USA • 954-766-2800 • www.kemet.com

Dimensions – Millimeters

Style A

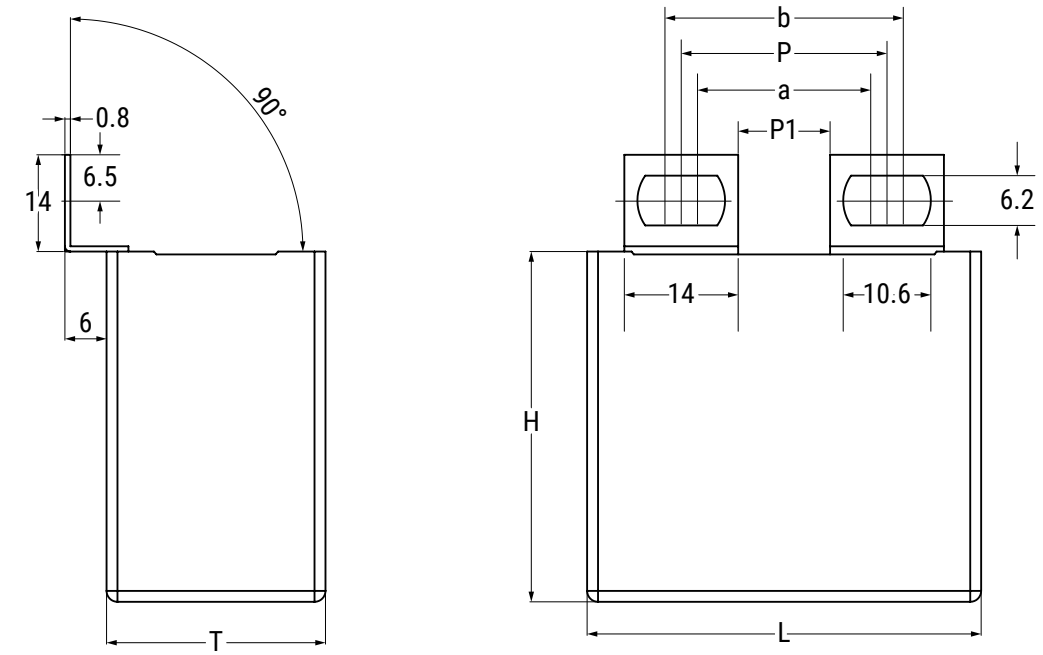

Style B

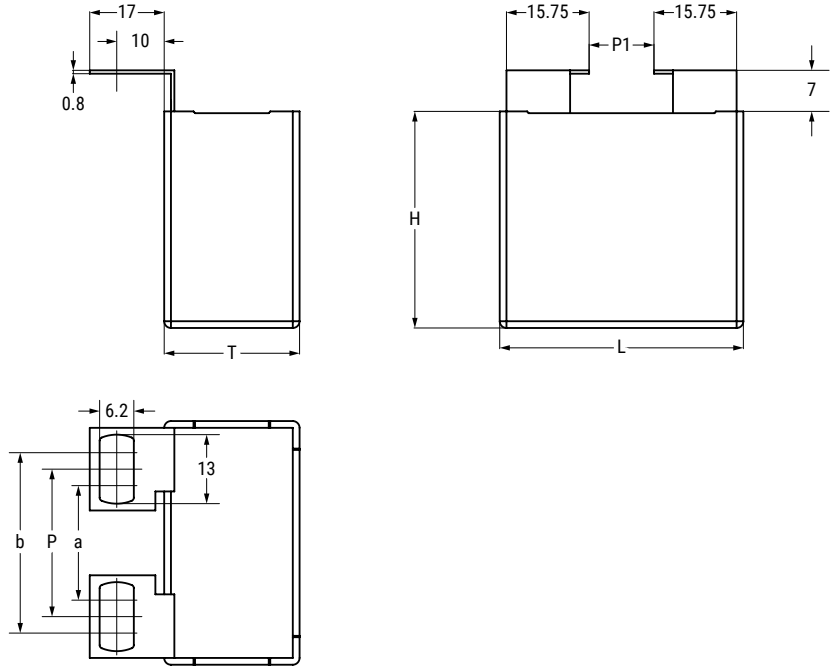

Dimensions – Millimeters cont.

Style D

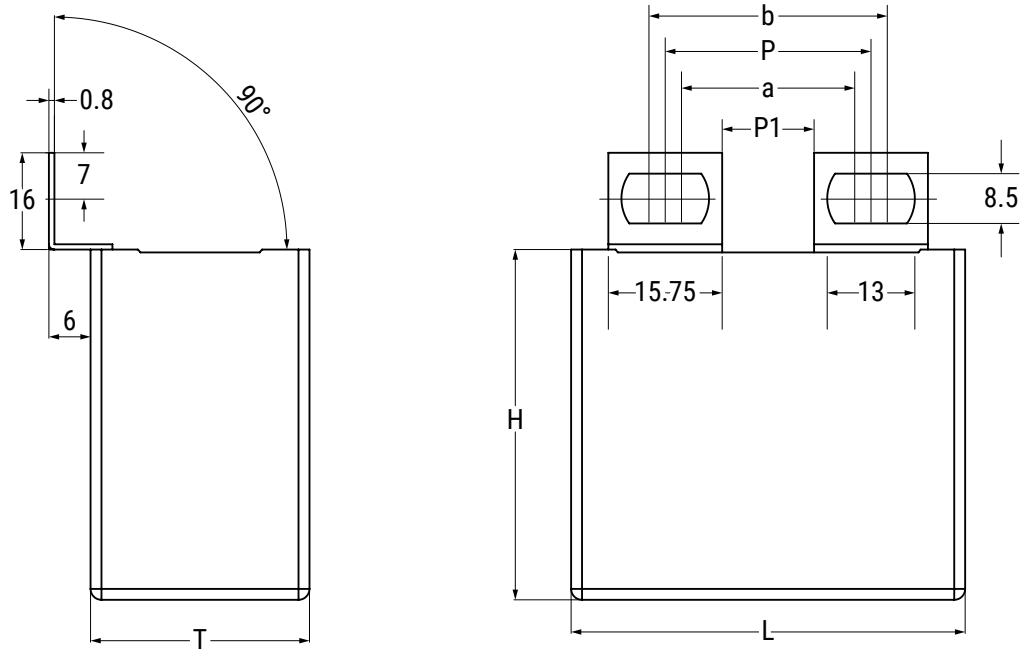

Style E

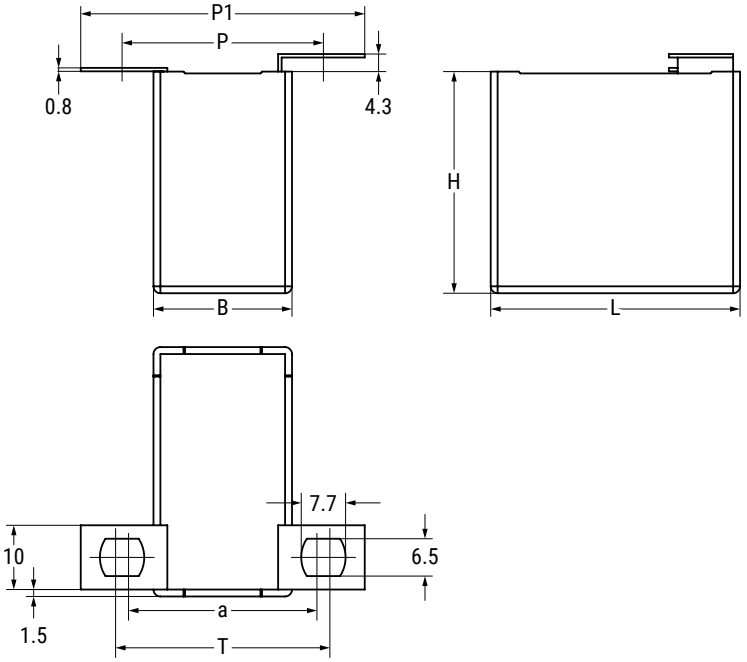

Dimensions – Millimeters cont.

Style F

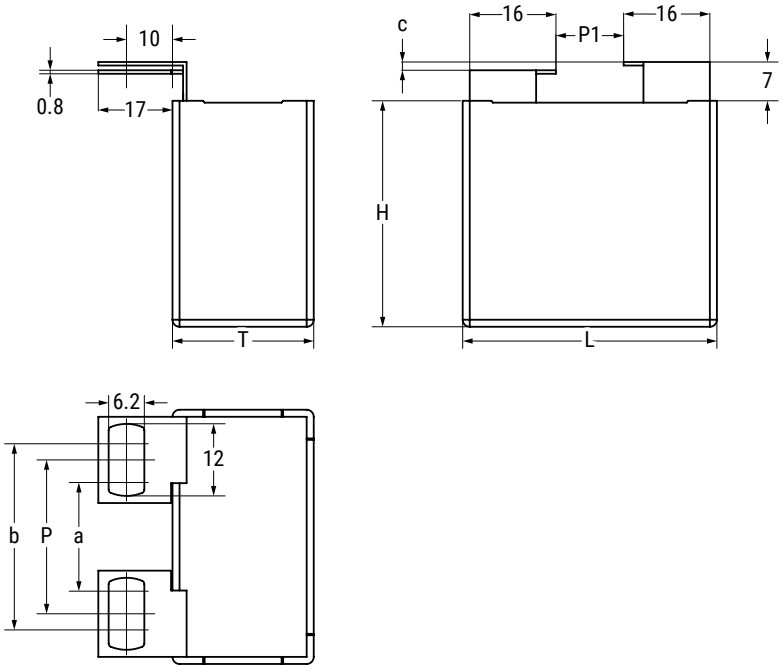

Style G

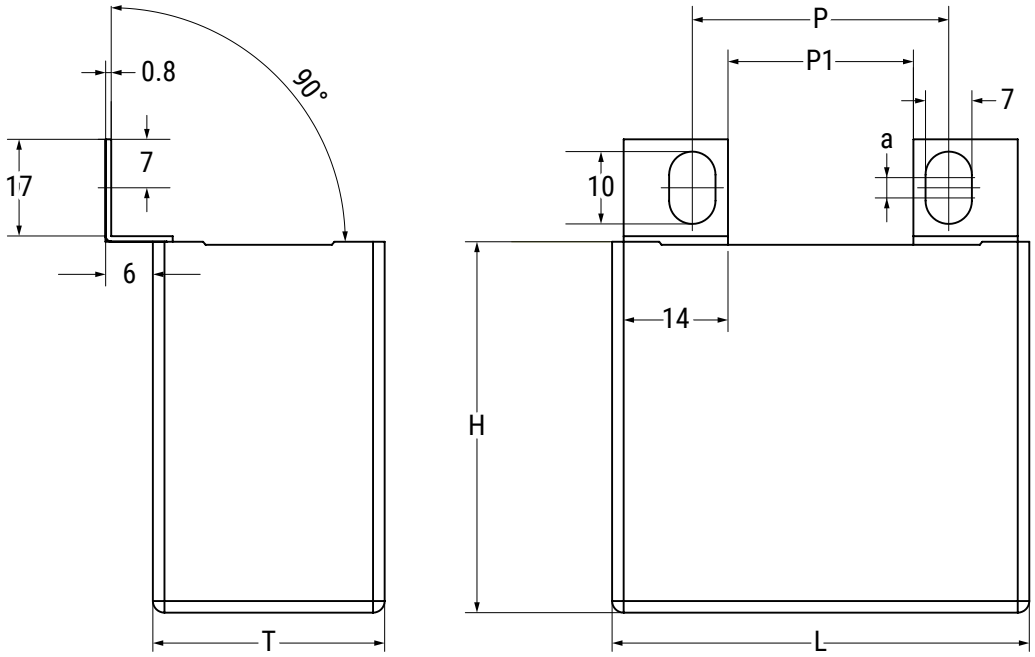

Dimensions – Millimeters cont.

Style H

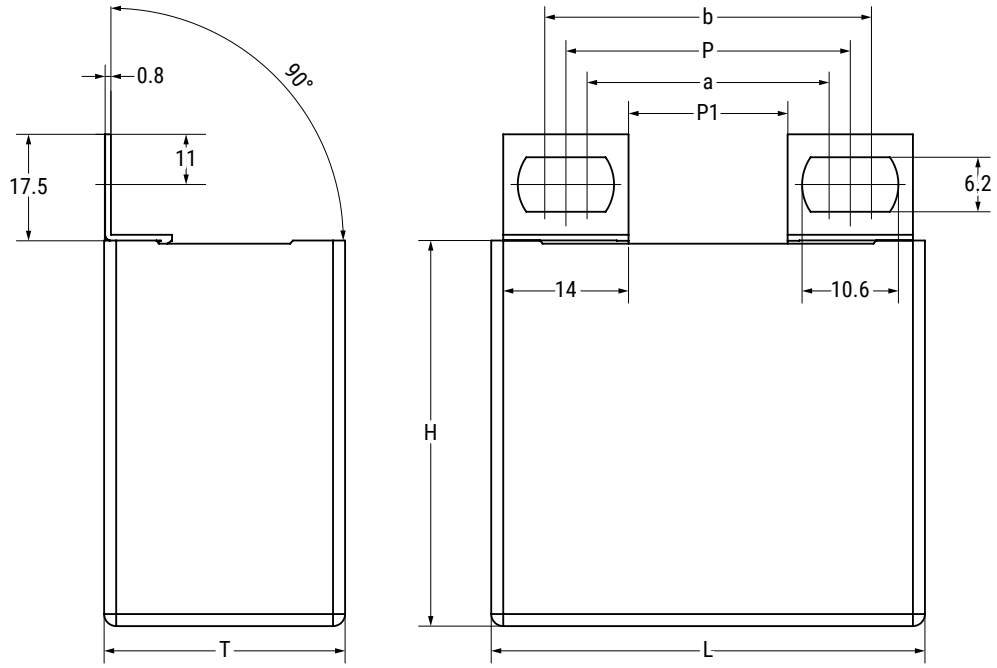

Style M

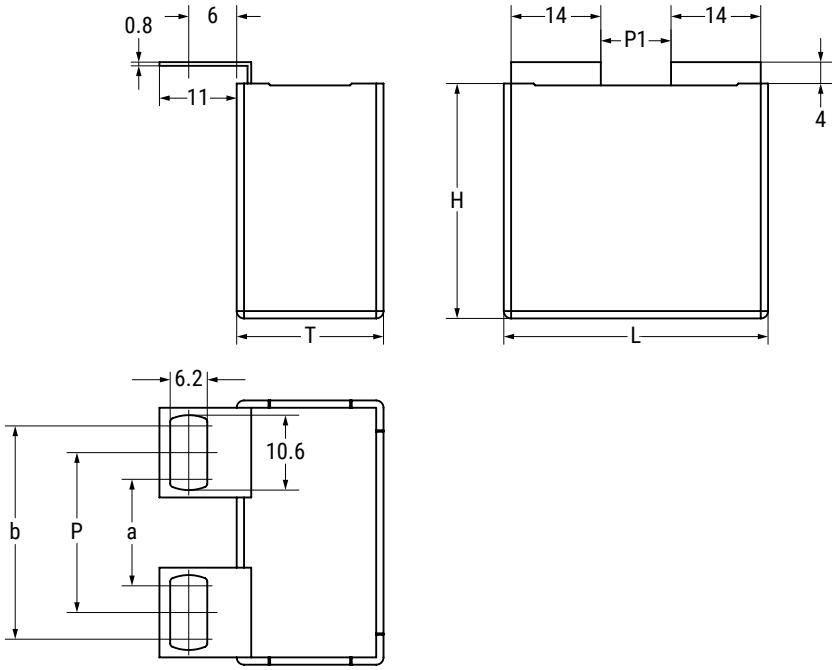

Dimensions – Millimeters cont.

Style T

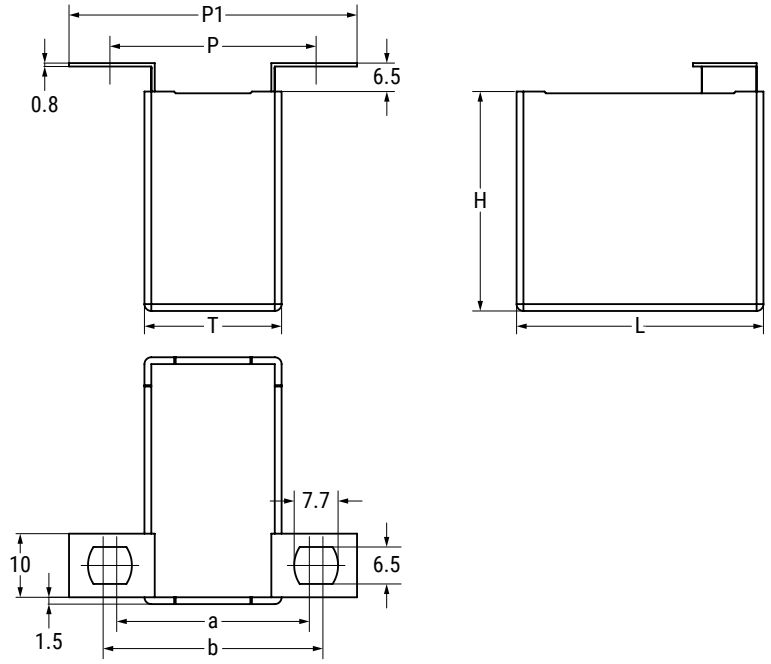

Style W

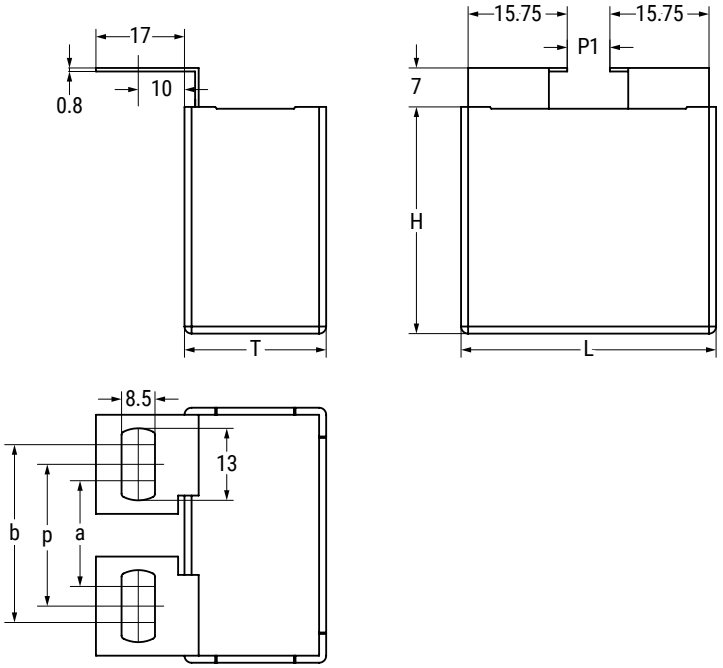

Dimensions – Millimeters cont.

Style X

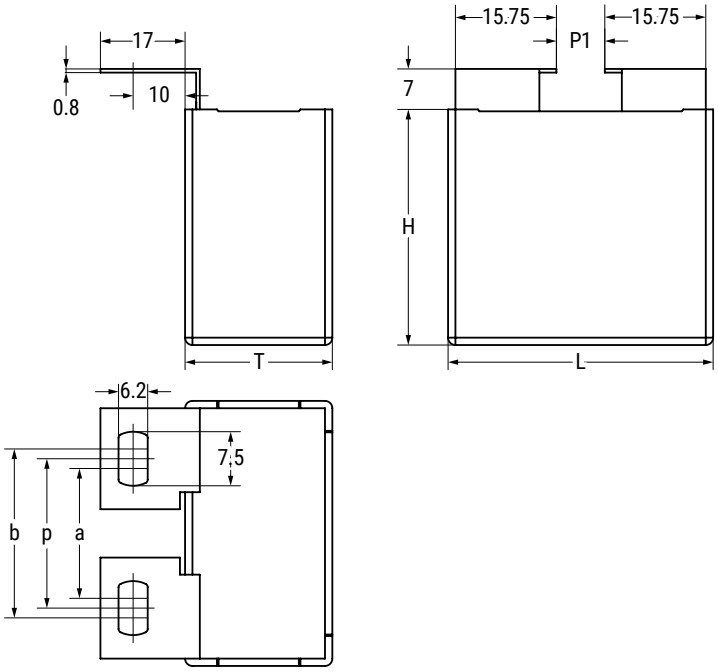

Size Code	T		H		L	
	Nominal	Tolerance	Nominal	Tolerance	Nominal	Tolerance
F	20	+0.4/−0.7	40	+0.2/−0.7	41.5	+1.5/−0.7
H	24	+0.4/−0.7	44	+0.2/−0.7	41.5	+1.5/−0.7
J	28	+0.4/−0.7	37	+0.2/−0.7	42.5	+1.5/−0.7
L	30	+0.4/−0.7	45	+0.2/−0.7	42.0	+1.5/−0.7
M	30	+0.5/−0.7	45	+0.3/−0.7	57.5	+1.2/−0.7
N	35	+0.5/−0.7	50	+0.3/−0.7	57.5	+1.2/−0.7

Style	Size Code	P	P1	a	b
		±0.2	Nominal	±0.2	±0.2
A, H, M	F, H, J, L	25.5	10.5	21.5	29.5
	M, N	41.0	25.0	37.0	45.0
B, F	F, H, J, L	22.0	6.0	16.0	28.0
	M - N	37.0	21.0	31.0	43.0
G	F, H, J, L	22.0	10.5	4.0	-
	M - N	37.0	25.0	4.0	-
D	F, J, H,L	22.0	6.0	18.0	26.0
	M, N	37.0	21.0	33.0	41.0
W	F, J, H,L	22.0	6.0	17.0	27.0
	M, N	37.0	21.0	32.0	42.0
X	F, J, H,L	22.0	6.0	20.5	23.5
	M, N	37.0	21.0	35.5	38.5
E, T	F	33.0	46.0	31.0	35.0

Qualifications

Reference Standards	IEC 61071, EN61071, VDE0560
Climatic Category	40/85/56 according to IEC 60068–1

Performance Characteristics

Temperature Range	−40°C to +85°C
Maximum Permissible Ambient Temperature	+70°C
Capacitance Tolerance Code (15th Digit)	J = ±5% , K = ±10%
Peak Non-Repetitive Maximum Current	I_{PKR} x 1.5
Peak Non-Repetitive Maximum Current	I_{PKR} x 1.5
Test Voltage Terminal to Terminal V_{TT}	2 V_n for 10 seconds at +25°C
Dissipation Factor (DF)	≥ 5 x 10^{-4} at 1 kHz and +20°C
Acceptable Relative Humidity	Annual average ≤ 70% ≤ 85% for ≤ 30 intermittant days annually Dewing not admissible
IEC Climatic Category	40/85/56 according to IEC 68–1
Capacitance Deviation in Operating Temperature Range of −40°C to +85°C	±2% maximum on capacitance value measured at +25°C
Change of Capacitance vs. Operating Time	−3% after 100,000 hours at V_n or 30,000 hours at V_{rms}
Case Components	Solvent resistant plastic case with epoxy and polyurethanic resin sealing, Flame retardant execution (UL Class 94V–0)
Terminals	Tinned copper wires
Installation	Any position
Life Expectancy	≥ 100,000 hours at V_n or 30,000 hours at V_{rms}
Failure Quota	300/109 components per hour

Table 1 – Ratings & Part Number Reference

Cap Value (µF)	VDC	VAC	Peak VDC	Size Code	Maximum Dimensions (mm)			Ripple Current	Peak Current	ESR (max)	ESL	dV/dt (V/µs)	Packaging Quantity	Part Number
					T	H	L	100 kHz 70°C (A)	(A)	100kHz (mΩ)	(nH)			
0.47	850	550	1200	F	20	40	41.5	16	356	8.2	41	758	52	C4BSMBX3470Z(1)FJ
0.47	850	550	1200	F	20	40	41.5	16	356	8.2	41	758	48	C4BSMBX3470Z(2)FJ
0.47	850	550	1200	F	20	40	41.5	16	356	8.2	41	758	40	C4BSMBX3470Z(4)FJ
0.68	850	550	1200	F	20	40	41.5	19	516	5.7	41	758	52	C4BSMBX3680Z(1)FJ
0.68	850	550	1200	F	20	40	41.5	19	516	5.7	41	758	48	C4BSMBX3680Z(2)FJ
0.68	850	550	1200	F	20	40	41.5	19	516	5.7	41	758	40	C4BSMBX3680Z(4)FJ
1	850	550	1200	F	20	40	41.5	22	758	4	41	758	52	C4BSMBX4100Z(1)FJ
1	850	550	1200	F	20	40	41.5	22	758	4	41	758	48	C4BSMBX4100Z(2)FJ
1	850	550	1200	F	20	40	41.5	22	758	4	41	758	40	C4BSMBX4100Z(4)FJ
1.5	850	550	1200	J	28	37	42.5	29	1138	2.7	36	758	36	C4BSMBX4150Z(3)JJ
2	850	550	1200	L	30	45	42	36	1517	2.1	43	758	32	C4BSMBX4200Z(3)LJ
2.2	850	550	1200	L	30	45	42	37	1668	1.9	43	758	32	C4BSMBX4220Z(3)LJ
2.5	850	550	1200	M	30	45	57.5	39	1174	1.7	45	469	24	C4BSMBX4250Z(3)MJ
3	850	550	1200	M	30	45	57.5	32	1408	3	45	469	24	C4BSMBX4300Z(3)MJ
3.3	850	550	1200	M	30	45	57.5	33	1549	2.8	45	469	24	C4BSMBX4330Z(3)MJ
4	850	550	1200	N	35	50	57.5	36	1878	2.3	48	469	21	C4BSMBX4400Z(3)NJ
5	850	550	1200	N	35	50	57.5	42	2347	1.9	48	469	21	C4BSMBX4500Z(3)NJ
0.47	1000	600	1300	F	20	40	41.5	16	389	7.6	41	827	52	C4BSNBX3470Z(1)FJ
0.47	1000	600	1300	F	20	40	41.5	16	389	7.6	41	827	48	C4BSNBX3470Z(2)FJ
0.47	1000	600	1300	F	20	40	41.5	16	389	7.6	41	827	40	C4BSNBX3470Z(4)FJ
0.68	1000	600	1300	F	20	40	41.5	20	563	5.3	41	827	52	C4BSNBX3680Z(1)FJ
0.68	1000	600	1300	F	20	40	41.5	20	563	5.3	41	827	48	C4BSNBX3680Z(2)FJ
0.68	1000	600	1300	F	20	40	41.5	20	563	5.3	41	827	40	C4BSNBX3680Z(4)FJ
1	1000	600	1300	F	20	40	41.5	23	827	3.7	41	827	52	C4BSNBX4100Z(1)FJ
1	1000	600	1300	F	20	40	41.5	23	827	3.7	41	827	48	C4BSNBX4100Z(2)FJ
1	1000	600	1300	F	20	40	41.5	23	827	3.7	41	827	40	C4BSNBX4100Z(4)FJ
1.5	1000	600	1300	J	28	37	42.5	30	1241	2.5	36	827	36	C4BSNBX4150Z(3)JJ
2	1000	600	1300	L	30	45	42	36	1655	2	43	827	32	C4BSNBX4200Z(3)LJ
2.2	1000	600	1300	M	30	45	57.5	29	1127	3.8	45	512	24	C4BSNBX4220Z(3)MJ
2.5	1000	600	1300	M	30	45	57.5	30	1280	3.3	45	512	24	C4BSNBX4250Z(3)MJ
3	1000	600	1300	M	30	45	57.5	33	1536	2.8	45	512	24	C4BSNBX4300Z(3)MJ
3.3	1000	600	1300	M	30	45	57.5	34	1690	2.6	45	512	24	C4BSNBX4330Z(3)MJ
4	1000	600	1300	N	35	50	57.5	40	2049	2.2	48	512	21	C4BSNBX4400Z(3)NJ
0.33	1200	630	1600	F	20	40	41.5	15	319	9.5	41	965	52	C4BSPBX3330Z(1)FJ
0.33	1200	630	1600	F	20	40	41.5	15	319	9.5	41	965	48	C4BSPBX3330Z(2)FJ
0.33	1200	630	1600	F	20	40	41.5	15	319	9.5	41	965	40	C4BSPBX3330Z(4)FJ
0.47	1200	630	1600	F	20	40	41.5	18	454	6.7	41	965	52	C4BSPBX3470Z(1)FJ
0.47	1200	630	1600	F	20	40	41.5	18	454	6.7	41	965	48	C4BSPBX3470Z(2)FJ
0.47	1200	630	1600	F	20	40	41.5	18	454	6.7	41	965	40	C4BSPBX3470Z(4)FJ
0.68	1200	630	1600	F	20	40	41.5	21	656	4.7	41	965	52	C4BSPBX3680Z(1)FJ
0.68	1200	630	1600	F	20	40	41.5	21	656	4.7	41	965	48	C4BSPBX3680Z(2)FJ
0.68	1200	630	1600	F	20	40	41.5	21	656	4.7	41	965	40	C4BSPBX3680Z(4)FJ
1	1200	630	1600	J	28	37	42.5	27	965	3.3	36	965	36	C4BSPBX4100Z(3)JJ
1.2	1200	630	1600	J	28	37	42.5	29	1158	2.8	36	965	36	C4BSPBX4120Z(3)JJ
Cap Value	**VDC**	**VAC**	**Peak VDC**	**Size Code**	**T**	**H**	**L**	**Ripple Current**	**Peak Current**	**ESR**	**ESL**	**dV/dt (V/µs)**	**Packaging Quantity**	**Part Number**
					Maximum Dimensions									

(1) = Code letter for lug style: A, D, G, H or M
(2) = Code letter for lug style: B, E, F, W, or X; * Style E is possible only for size code F*
(3) = Code letter for lug style: A, B, D, F, G, H, M, W or X
(4) = Code letter for lug style: T
Capacitance tolerance standard is J, K tolerance upon request.

Table 1 – Ratings & Part Number Reference cont.

Cap Value (µF)	VDC	VAC	Peak VDC	Size Code	Maximum Dimensions (mm)			Ripple Current	Peak Current	ESR (max)	ESL	dV/dt (V/µs)	Packaging Quantity	Part Number
					T	H	L	100 kHz 70°C (A)	(A)	100kHz (mΩ)	(nH)			
1.5	1200	630	1600	L	30	45	42	34	1448	2.3	43	965	32	C4BSPBX4150Z(3)LJ
2	1200	630	1600	M	30	45	57.5	29	1195	3.6	45	598	24	C4BSPBX4200Z(3)MJ
2.2	1200	630	1600	M	30	45	57.5	30	1315	3.3	45	598	24	C4BSPBX4220Z(3)MJ
2.5	1200	630	1600	M	30	45	57.5	32	1494	2.9	45	598	24	C4BSPBX4250Z(3)MJ
3	1200	630	1600	N	35	50	57.5	37	1793	2.5	48	598	21	C4BSPBX4300Z(3)NJ
3.3	1200	630	1600	N	35	50	57.5	39	1972	2.3	48	598	21	C4BSPBX4330Z(3)NJ
0.1	2000	700	2400	F	20	40	41.5	10	138	23.3	41	1379	52	C4BSWBX3100Z(1)FJ
0.1	2000	700	2400	F	20	40	41.5	10	138	23.3	41	1379	48	C4BSWBX3100Z(2)FJ
0.1	2000	700	2400	F	20	40	41.5	10	138	23.3	41	1379	40	C4BSWBX3100Z(4)FJ
0.15	2000	700	2400	F	20	40	41.5	12	207	15.6	41	1379	52	C4BSWBX3150Z(1)FJ
0.15	2000	700	2400	F	20	40	41.5	12	207	15.6	41	1379	48	C4BSWBX3150Z(2)FJ
0.15	2000	700	2400	F	20	40	41.5	12	207	15.6	41	1379	40	C4BSWBX3150Z(4)FJ
0.22	2000	700	2400	F	20	40	41.5	14	303	10.7	41	1379	52	C4BSWBX3220Z(1)FJ
0.22	2000	700	2400	F	20	40	41.5	14	303	10.7	41	1379	48	C4BSWBX3220Z(2)FJ
0.22	2000	700	2400	F	20	40	41.5	14	303	10.7	41	1379	40	C4BSWBX3220Z(4)FJ
0.33	2000	700	2400	F	20	40	41.5	17	455	7.2	41	1379	52	C4BSWBX3330Z(1)FJ
0.33	2000	700	2400	F	20	40	41.5	17	455	7.2	41	1379	48	C4BSWBX3330Z(2)FJ
0.33	2000	700	2400	F	20	40	41.5	17	455	7.2	41	1379	40	C4BSWBX3330Z(4)FJ
0.47	2000	700	2400	F	20	40	41.5	20	648	5.1	41	1379	52	C4BSWBX3470Z(1)FJ
0.47	2000	700	2400	F	20	40	41.5	20	648	5.1	41	1379	48	C4BSWBX3470Z(2)FJ
0.47	2000	700	2400	F	20	40	41.5	20	648	5.1	41	1379	40	C4BSWBX3470Z(4)FJ
0.68	2000	700	2400	H	24	44	41.5	26	938	3.6	43	1379	44	C4BSWBX3680Z(1)HJ
0.68	2000	700	2400	H	24	44	41.5	26	938	3.6	43	1379	40	C4BSWBX3680Z(2)HJ
0.82	2000	700	2400	L	30	45	42	30	1131	3	43	1379	32	C4BSWBX3820Z(3)LJ
1	2000	700	2400	M	30	45	57.5	24	854	5.1	45	854	24	C4BSWBX4100Z(3)MJ
1.2	2000	700	2400	M	30	45	57.5	26	1024	4.3	45	854	24	C4BSWBX4120Z(3)MJ
1.5	2000	700	2400	N	35	50	57.5	31	1280	3.5	48	854	21	C4BSWBX4150Z(3)NJ
0.047	3000	750	3500	F	20	40	41.5	8	97	36.6	41	2068	52	C4BSYBX2470Z(1)FJ
0.047	3000	750	3500	F	20	40	41.5	8	97	36.6	41	2068	48	C4BSYBX2470Z(2)FJ
0.047	3000	750	3500	F	20	40	41.5	8	97	36.6	41	2068	40	C4BSYBX2470Z(4)FJ
0.068	3000	750	3500	F	20	40	41.5	10	141	25.4	41	2068	52	C4BSYBX2680Z(1)FJ
0.068	3000	750	3500	F	20	40	41.5	10	141	25.4	41	2068	48	C4BSYBX2680Z(2)FJ
0.068	3000	750	3500	F	20	40	41.5	10	141	25.4	41	2068	40	C4BSYBX2680Z(4)FJ
0.1	3000	750	3500	F	20	40	41.5	12	207	17.3	41	2068	52	C4BSYBX3100Z(1)FJ
0.1	3000	750	3500	F	20	40	41.5	12	207	17.3	41	2068	48	C4BSYBX3100Z(2)FJ
0.1	3000	750	3500	F	20	40	41.5	12	207	17.3	41	2068	40	C4BSYBX3100Z(4)FJ
0.22	3000	750	3500	F	20	40	41.5	17	455	8	41	2068	52	C4BSYBX3220Z(1)FJ
0.22	3000	750	3500	F	20	40	41.5	17	455	8	41	2068	48	C4BSYBX3220Z(2)FJ
0.22	3000	750	3500	F	20	40	41.5	17	455	8	41	2068	40	C4BSYBX3220Z(4)FJ
0.33	3000	750	3500	L	30	45	42	24	683	5.4	43	2068	32	C4BSYBX3330Z(3)LJ
0.47	3000	750	3500	M	30	45	57.5	20	602	7.5	45	1280	24	C4BSYBX3470Z(3)MJ
0.68	3000	750	3500	N	35	50	57.5	23	871	5.3	48	1280	21	C4BSYBX3680Z(3)NJ
0.82	3000	750	3500	N	35	50	57.5	28	1050	4.4	48	1280	21	C4BSYBX3820Z(3)NJ
Cap Value	**VDC**	**VAC**	**Peak VDC**	**Size Code**	**T**	**H**	**L**	**Ripple Current**	**Peak Current**	**ESR**	**ESL**	**dV/dt (V/µs)**	**Packaging Quantity**	**Part Number**
					Maximum Dimensions									

(1) = Code letter for lug style: A, D, G, H or M
(2) = Code letter for lug style: B, E, F, W, or X; * Style E is possible only for size code F*
(3) = Code letter for lug style: A, B, D, F, G, H, M, W or X
(4) = Code letter for lug style: T
Capacitance tolerance standard is J, K tolerance upon request.

Environmental Compliance

As a leading global supplier of electronic components and an environmentally conscious company, KEMET continually aspires to improve the environmental effects of our manufacturing processes and our finished electronic components.

In Europe (RoHS Directive) and in some other geographical areas such as China (China RoHS), legislation has been enacted to prevent or otherwise limit the use of certain hazardous materials including lead (Pb), in electronic equipment. KEMET monitors legislation globally to ensure compliance and endeavors to adjust our manufacturing processes and/or electronic components as may be required by applicable law.

For military, medical, automotive, and some commercial applications, the use of lead (Pb) in the termination is necessary and/or required by design. KEMET is committed to communicating RoHS compliance to our customers. Information related to RoHS compliance will be provided in datasheets and using specific identifiers on the packaging labels.

All KEMET power film capacitors are RoHS compliant.

Materials & Environment

The selection of raw materials that KEMET uses for the production of its electronic components is the result of extensive experience. KEMET directs specific attention toward environmental protection. KEMET selects its suppliers according to ISO 9001 standards and performs statistical analyses on raw materials before acceptance for use in manufacturing our electronic components. All materials are, to the best of KEMET's knowledge, non-toxic and free from cadmium; mercury; chrome and compounds; polychlorine triphenyl (PCB); bromide and chlorinedioxins bromurate clorurate; CFC and HCFC; and asbestos.

Dissipation Factor

Dissipation factor is a complex function involved with capacitor inefficiency. The tgδ may vary up and down with increased temperature. For more information, refer to Performance Characteristics.

Sealing

Hermetically Sealed Capacitors
As the temperature increases, the pressure inside the capacitor increases. If the internal pressure is high enough, it can cause a breach in the capacitor. Such a breach can result in leakage, impregnation, filling fluid, or moisture susceptibility.

Barometric Pressure
The altitude at which hermetically sealed capacitors are operated controls the capacitor's voltage rating. As the barometric pressure decreases, the susceptibility to terminal arc-over increases. Non-hermetic capacitors can be affected by internal stresses due to pressure changes. These effects can be in the form of capacitance changes, dielectric arc-over, and/or low insulation resistance. Altitude can also affect heat transfer. Heat that is generated in an operation cannot be dissipated properly, and high RI^2 losses and eventual failure can result.

Construction

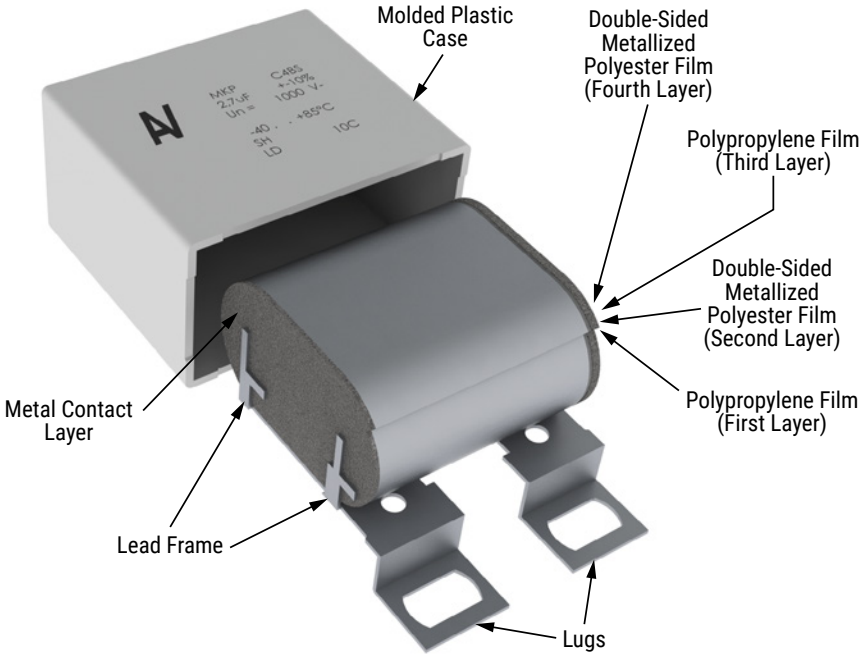

Winding Scheme

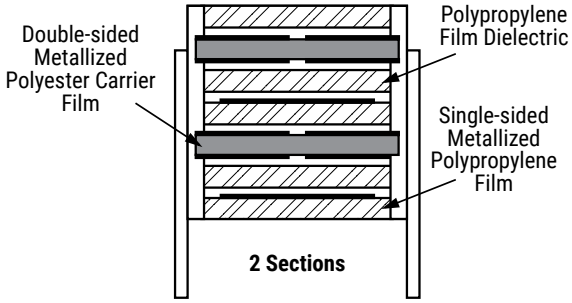

Marking

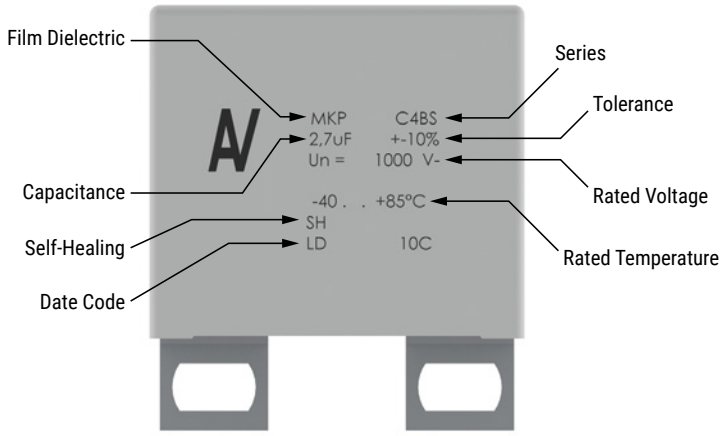
Film Dielectric
Series
Tolerance
Capacitance
Rated Voltage
Self-Healing
Rated Temperature
Date Code
MKP
C4BS
2,7uF
+-10%
Un =
1000 V-
-40 . . +85°C
SH
LD
10C

KEMET Electronics Corporation Sales Offices

For a complete list of our global sales offices, please visit www.kemet.com/sales.

Disclaimer

YAGEO Corporation and its affiliates do not recommend the use of commercial or automotive grade products for high reliability applications or manned space flight.

All product specifications, statements, information and data (collectively, the "Information") in this datasheet are subject to change. The customer is responsible for checking and verifying the extent to which the Information contained in this publication is applicable to an order at the time the order is placed. All Information given herein is believed to be accurate and reliable, but it is presented without guarantee, warranty, or responsibility of any kind, expressed or implied.

Statements of suitability for certain applications are based on KEMET Electronics Corporation's ("KEMET") knowledge of typical operating conditions for such applications, but are not intended to constitute – and KEMET specifically disclaims – any warranty concerning suitability for a specific customer application or use. The Information is intended for use only by customers who have the requisite experience and capability to determine the correct products for their application. Any technical advice inferred from this Information or otherwise provided by KEMET with reference to the use of KEMET's products is given gratis, and KEMET assumes no obligation or liability for the advice given or results obtained.

Although KEMET designs and manufactures its products to the most stringent quality and safety standards, given the current state of the art, isolated component failures may still occur. Accordingly, customer applications which require a high degree of reliability or safety should employ suitable designs or other safeguards (such as installation of protective circuitry or redundancies) in order to ensure that the failure of an electrical component does not result in a risk of personal injury or property damage.

Although all product–related warnings, cautions and notes must be observed, the customer should not assume that all safety measures are indicated or that other measures may not be required.

Additional information about production site flexibility can be found <here>

KEMET is a registered trademark of KEMET Electronics Corporation.