Aluminum Can Power Film Capacitors

# C44A, 400 – 1,500 VDC/250 – 630 VAC, for General Purpose & Snubbing

## Overview

The C44A capacitor is a polypropylene metallized film capacitor with a cylindrical, aluminium can-type design filled with resin. It uses screw or faston terminals and a plastic insulator.

## Applications

Typical applications include snubber, commutation, resonance, DC filtering, AC harmonic filtering, pulse, and energy storage.

## Benefits

- High capacitance density
- High peak current
- Self-healing

## Part Number System

| C44A | F | F | P | 5150 | ZA0 | J |
|---|---|---|---|---|---|---|
| Series | Rated Voltage (VDC) | Case and Fixing Bolt Code | Terminal Style | Capacitance Code (pF) | Internal Code | Tolerance |
| C44A = MKP, General Purpose | F = 400<br>H = 600<br>J = 700<br>M = 850<br>P = 1,200<br>S = 1,500 | F = Cylindrical aluminum case with M8 bolt<br>G = Cylindrical aluminum case with M12 bolt | P = M6 Threaded posts<br>R = M10 Threaded posts<br>Q = M8 Threaded posts (on request)<br>2 = Simple faston 6.3 x 0.8 mm (on request)<br>3 = Double faston 6.3 x 0.8 mm (on request) | Digits 2 – 4 indicate the first three digits of the capacitance value.<br>First digit indicates the number of zeros to be added. | ZA0, ZB0, ZC0, ZD0, ZE0, ZF0, ZG0, ZH0 = Standard | J = 5%<br>K = 10% |


© KEMET Electronics Corporation • KEMET Tower • One East Broward Boulevard
Fort Lauderdale, FL 33301 USA • 954-766-2800 • www.kemet.com

## Dimensions – Millimeters

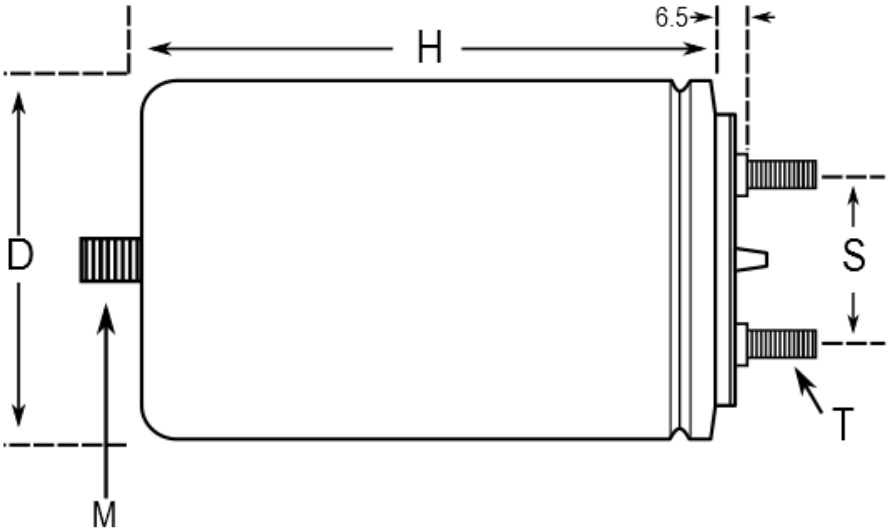


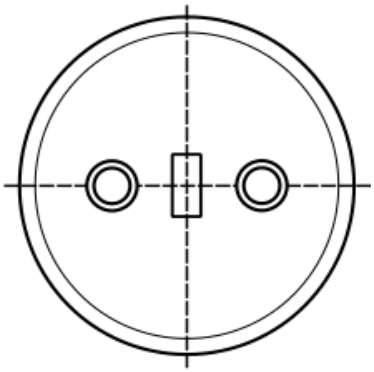

| D | H | S | Terminations (T) | Mounting Stud (M) |
|---|---|---|---|---|
| ±0.5 | ±2 | ±0.5 | | |
| 45 | 80 | 22.3 | M6 x 13 | M8 x 10 |
| 45 | 101 | 22.3 | M6 x 13 | M8 x 10 |
| 45 | 105 | 22.3 | M6 x 13 | M8 x 10 |
| 50 | 76 | 22.3 | M6 x 13 | M8 x 10 |
| 50 | 101 | 22.3 | M6 x 13 | M8 x 10 |
| 50 | 138 | 22.3 | M6 x 13 | M8 x 10 |
| 55 | 101 | 22.3 | M6 x 13 | M12 x 12.5 |
| 55 | 138 | 22.3 | M6 x 13 | M12 x 12.5 |
| 60 | 100 | 22.3 | M6 x 13 | M12 x 12.5 |
| 60 | 101 | 22.3 | M6 x 13 | M12 x 12.5 |
| 60 | 138 | 22.3 | M6 x 13 | M12 x 12.5 |
| 65 | 101 | 22.3 | M6 x 13 | M12 x 12.5 |
| 65 | 135 | 22.3 | M6 x 13 | M12 x 12.5 |
| 65 | 138 | 22.3 | M6 x 13 | M12 x 12.5 |
| 65 | 158 | 22.3 | M6 x 13 | M12 x 12.5 |
| 70 | 138 | 22.3 | M6 x 13 | M12 x 12.5 |
| 76 | 135 | 35 | M6 x 13 | M12 x 12.5 |
| 76 | 138 | 35 | M6 x 13 | M12 x 12.5 |
| 76 | 200 | 35 | M6 x 13 | M12 x 12.5 |
| 85 | 137 | 35 | M10 x 25 | M12 x 12.5 |
| 85 | 138 | 35 | M10 x 25 | M12 x 12.5 |
| 85 | 150 | 35 | M10 x 25 | M12 x 12.5 |
| 85 | 185 | 35 | M10 x 25 | M12 x 12.5 |

## Qualification

| | |
|---|---|
| Reference Standards | VDE 0560, IEC 071, EN 61071 |
| Application Class (DIN 40040) | GPD/LS |

## Performance Characteristics

| | |
|---|---|
| Reference Standards | VDE 0560, IEC 071, EN 61071 |
| Application Class (DIN 40040) | GPD/LS |
| Temperature Range | −40°C to +85°C |
| Maximum Permissible Ambient Temperature | +70°C |
| Capacitance Tolerance | ±5%, ±10% |
| Test Voltage Terminal to Case ($V_{TT}$) | 1.5 $V_{RMS}$ for 60 seconds |
| Test Voltage Terminal to Case ($V_{TC}$) | 3 kV – 50 Hz for 60 seconds |
| Rated Insulation Voltage ($V_i$) | 700 V – 50 Hz Insulation Group B (VDE 0110 Part 1) |
| Dissipation Factor (DF) | ≤ 3 x $10^{-4}$ ($V_n$, 50 Hz) |
| Acceptable Relative Humidity | Annual average ≤ 70%<br>≤ 85% for ≤ 30 intermittant days annually<br>Dewing not admissible |
| IEC Climatic Category | 40/85/21 |
| Degree of Protection | IP00 |
| Capacitance Deviation in the Operating Temperature Range of −40°C to + 85°C | ±1.5 maximum on capacitance value measured at +20°C |
| Change of Capacitance vs. Operating Time | −3% after 30,000 hours at $V_{RMS}$ or after 100,000 hours at $V_n$ |
| Case Components | Aluminum case plus plastic insulating deck with flame retardant execution (UL 94 V1) |
| Terminations | Tinned brass fastons or screws |
| Installation | Any position |
| Life Expectancy | ≥ 30,000 hours at $V_{RMS}$, ≥ 100,000 hours at $V_n$ |
| Failure Quota | 300/$10^9$ components per hour |

## Table 1 – Ratings & Part Number Reference

| Cap Value (µF) | VDC | VAC | Peak VDC | Dimensions (mm) | | Ripple Current | Peak Current | ESR (typ.) | dV/dt (V/µs) | Thermal Resistance | Packaging Quantity | Part Number |
|---|---|---|---|---|---|---|---|---|---|---|---|---|
| | | | | D | H | (A) | (A) | (mΩ) | | (°C/W) | | |
| 15 | 400 | 250 | 600 | 45 | 80 | 16 | 450 | 5 | 30 | 7.8 | 60 | C44AFF(1)5150ZA0(3) |
| 20 | 400 | 250 | 600 | 45 | 80 | 18 | 600 | 5 | 30 | 6.2 | 60 | C44AFF(1)5200ZE0(3) |
| 22 | 400 | 250 | 600 | 45 | 80 | 18 | 660 | 5 | 30 | 6.2 | 60 | C44AFF(1)5220ZA0(3) |
| 25 | 400 | 250 | 600 | 45 | 80 | 18 | 750 | 5 | 30 | 6.2 | 60 | C44AFF(1)5250ZA0(3) |
| 30 | 400 | 250 | 600 | 50 | 101 | 22 | 600 | 6 | 20 | 3.5 | 25 | C44AFF(1)5300ZA0(3) |
| 40 | 400 | 250 | 600 | 50 | 101 | 25 | 800 | 6 | 20 | 2.7 | 25 | C44AFF(1)5400ZA0(3) |
| 50 | 400 | 250 | 600 | 50 | 101 | 25 | 1000 | 6 | 20 | 2.6 | 25 | C44AFF(1)5500ZE0(3) |
| 60 | 400 | 250 | 600 | 60 | 101 | 25 | 1200 | 6 | 20 | 2.6 | 16 | C44AFG(1)5600ZA0(3) |
| 75 | 400 | 250 | 600 | 60 | 101 | 30 | 1500 | 5 | 20 | 3.2 | 16 | C44AFG(1)5750ZA0(3) |
| 100 | 400 | 250 | 600 | 60 | 138 | 32 | 1500 | 4 | 15 | 4 | 20 | C44AFG(1)6100ZG0(3) |
| 130 | 400 | 250 | 600 | 65 | 138 | 32 | 2000 | 4 | 15 | 4 | 12 | C44AFG(1)6130ZA0(3) |
| 150 | 400 | 250 | 600 | 70 | 138 | 32 | 2250 | 4 | 15 | 4 | 12 | C44AFG(1)6150ZA0(3) |
| 200 | 400 | 250 | 600 | 76 | 138 | 32 | 2000 | 4 | 10 | 4 | 9 | C44AFG(1)6200ZE0(3) |
| 250 | 400 | 250 | 600 | 85 | 150 | 32 | 2500 | 4 | 10 | 4 | 5 | C44AFG(2)6250ZA0(3) |
| 300 | 400 | 250 | 600 | 85 | 185 | 50 | 6000 | 5 | 20 | 1.25 | 9 | C44AFG(2)6300ZA0(3) |
| 330 | 400 | 250 | 600 | 85 | 185 | 50 | 6000 | 5 | 20 | 1.25 | 5 | C44AFG(2)6330ZA0(3) |
| 10 | 600 | 330 | 800 | 45 | 80 | 16 | 400 | 5 | 40 | 7.8 | 60 | C44AHF(1)5100ZA0(3) |
| 15 | 600 | 330 | 800 | 45 | 105 | 18 | 600 | 4 | 40 | 7.7 | 30 | C44AHF(1)5150ZA0(3) |
| 20 | 600 | 330 | 800 | 45 | 101 | 22 | 600 | 4 | 30 | 5.2 | 30 | C44AHF(1)5200ZB0(3) |
| 22 | 600 | 330 | 800 | 50 | 101 | 25 | 660 | 3 | 30 | 5.3 | 25 | C44AHF(1)5220ZA0(3) |
| 25 | 600 | 330 | 800 | 50 | 101 | 22 | 600 | 6 | 20 | 3.5 | 25 | C44AHF(1)5250ZB0(3) |
| 30 | 600 | 330 | 800 | 50 | 101 | 25 | 900 | 2 | 30 | 10.3 | 20 | C44AHF(1)5300ZC0(3) |
| 33 | 600 | 330 | 800 | 55 | 101 | 25 | 990 | 2 | 30 | 8 | 20 | C44AHG(1)5330ZA0(3) |
| 40 | 600 | 330 | 800 | 60 | 101 | 25 | 1200 | 2 | 30 | 8 | 16 | C44AHG(1)5400ZB0(3) |
| 50 | 600 | 330 | 800 | 55 | 138 | 25 | 1000 | 5 | 20 | 3.2 | 20 | C44AHG(1)5500ZG0(3) |
| 60 | 600 | 330 | 800 | 60 | 138 | 32 | 1200 | 5 | 20 | 3.1 | 16 | C44AHG(1)5600ZB0(3) |
| 70 | 600 | 330 | 800 | 65 | 138 | 32 | 1400 | 5 | 20 | 3.2 | 12 | C44AHG(1)5700ZA0(3) |
| 75 | 600 | 330 | 800 | 65 | 138 | 32 | 1500 | 5 | 20 | 3.2 | 12 | C44AHG(1)5750ZA0(3) |
| 80 | 600 | 330 | 800 | 65 | 135 | 32 | 1600 | 5 | 20 | 3.2 | 12 | C44AHG(1)5800ZA0(3) |
| 100 | 600 | 330 | 800 | 76 | 135 | 32 | 2000 | 5 | 20 | 3.2 | 9 | C44AHG(1)6100ZA0(3) |
| 100 | 600 | 330 | 800 | 85 | 138 | 50 | 3000 | 5 | 30 | 1.25 | 5 | C44AHG(2)6100ZB0(3) |
| 5 | 700 | 400 | 900 | 45 | 80 | 16 | 250 | 3 | 50 | 13 | 60 | C44AJF(1)4500ZA0(3) |
| 6 | 700 | 400 | 900 | 45 | 80 | 16 | 300 | 3 | 50 | 13 | 60 | C44AJF(1)4600ZA0(3) |
| 7.5 | 700 | 400 | 900 | 45 | 80 | 18 | 375 | 3 | 50 | 10.3 | 60 | C44AJF(1)4750ZA0(3) |
| 10 | 700 | 400 | 900 | 50 | 101 | 18 | 500 | 3 | 50 | 10 | 25 | C44AJF(1)5100ZA0(3) |
| 15 | 700 | 400 | 900 | 50 | 101 | 25 | 600 | 3 | 40 | 5.3 | 25 | C44AJF(1)5150ZB0(3) |
| 20 | 700 | 400 | 900 | 50 | 101 | 25 | 800 | 3 | 40 | 5.3 | 25 | C44AJF(1)5200ZD0(3) |
| 22 | 700 | 400 | 900 | 55 | 101 | 25 | 880 | 3 | 40 | 5.3 | 20 | C44AJG(1)5220ZA0(3) |
| 25 | 700 | 400 | 900 | 60 | 101 | 25 | 1000 | 3 | 40 | 5.3 | 16 | C44AJG(1)5250ZA0(3) |
| 30 | 700 | 400 | 900 | 60 | 138 | 25 | 900 | 3 | 30 | 5.3 | 16 | C44AJG(1)5300ZB0(3) |
| 33 | 700 | 400 | 900 | 60 | 138 | 25 | 990 | 3 | 35 | 5.3 | 16 | C44AJG(1)5330ZA0(3) |
| 40 | 700 | 400 | 900 | 65 | 138 | 32 | 1200 | 4 | 35 | 4 | 12 | C44AJG(1)5400ZA0(3) |
| 50 | 700 | 400 | 900 | 65 | 138 | 32 | 1500 | 4 | 35 | 4 | 12 | C44AJG(1)5500ZA0(3) |
| 60 | 700 | 400 | 900 | 76 | 138 | 32 | 1800 | 4 | 30 | 4 | 9 | C44AJG(1)5600ZA0(3) |
| 70 | 700 | 400 | 900 | 76 | 138 | 32 | 2100 | 4 | 30 | 4 | 9 | C44AJG(1)5700ZA0(3) |
| Cap Value (µF) | VDC | VAC | Peak VDC | D | H | (A) | (A) | (mΩ) | dV/dt (V/µs) | (°C/W) | Packaging Quantity | Part Number |
| | | | | Dimensions (mm) | | Ripple Current | Peak Current | ESR (typ.) | | Thermal Resistance | | |

*(1) P = M6, Q = M8 (on request), 2 = Single Fast-On (on request), 3 = Double Fast-On (on request)*
*(2) R = M10, 2 = Single Fast-On (on request), 3 = Double Fast-On (on request)*
*(3) K = ±10%, J = ±5%*

## Table 1 – Ratings & Part Number Reference cont.

| Cap Value (µF) | VDC | VAC | Peak VDC | Dimensions (mm) | | Ripple Current | Peak Current | ESR (typ.) | dV/dt (V/µs) | Thermal Resistance | Packaging Quantity | Part Number |
|---|---|---|---|---|---|---|---|---|---|---|---|---|
| | | | | D | H | (A) | (A) | (mΩ) | | (°C/W) | | |
| 75 | 700 | 400 | 900 | 85 | 137 | 32 | 2250 | 4 | 30 | 4 | 9 | C44AJG(2)5750ZA0(3) |
| 100 | 700 | 400 | 900 | 85 | 185 | 50 | 4000 | 3 | 40 | 2 | 5 | C44AJG(2)6100ZA0(3) |
| 3 | 850 | 450 | 1000 | 45 | 80 | 16 | 180 | 5 | 60 | 7.8 | 60 | C44AMF(1)4300ZA0(3) |
| 5 | 850 | 450 | 1000 | 45 | 80 | 16 | 300 | 5 | 60 | 7.8 | 60 | C44AMF(1)4500ZA0(3) |
| 6 | 850 | 450 | 1000 | 45 | 80 | 18 | 360 | 5 | 60 | 6.2 | 60 | C44AMF(1)4600ZA0(3) |
| 8 | 850 | 450 | 1000 | 45 | 105 | 22 | 400 | 5 | 50 | 4.1 | 30 | C44AMF(1)4800ZA0(3) |
| 10 | 850 | 450 | 1000 | 50 | 97 | 25 | 500 | 5 | 50 | 3.2 | 25 | C44AMF(1)5100ZD0(3) |
| 15 | 850 | 450 | 1000 | 60 | 101 | 25 | 750 | 8 | 50 | 2 | 16 | C44AMG(1)5150ZA0(3) |
| 20 | 850 | 450 | 1000 | 65 | 101 | 25 | 1000 | 6 | 50 | 2.6 | 12 | C44AMG(1)5200ZA0(3) |
| 22 | 850 | 450 | 1000 | 55 | 138 | 25 | 880 | 4 | 40 | 1.5 | 20 | C44AMG(1)5220ZA0(3) |
| 25 | 850 | 450 | 1000 | 55 | 138 | 25 | 1000 | 5 | 40 | 3.2 | 20 | C44AMG(1)5250ZA0(3) |
| 30 | 850 | 450 | 1000 | 65 | 138 | 32 | 1200 | 5 | 40 | 3.2 | 12 | C44AMG(1)5300ZA0(3) |
| 33 | 850 | 450 | 1000 | 65 | 138 | 32 | 1320 | 5 | 40 | 3.2 | 12 | C44AMG(1)5330ZA0(3) |
| 35 | 850 | 450 | 1000 | 65 | 138 | 32 | 1400 | 5 | 40 | 3.2 | 12 | C44AMG(1)5350ZA0(3) |
| 40 | 850 | 450 | 1000 | 76 | 138 | 32 | 1600 | 5 | 40 | 3.2 | 9 | C44AMG(1)5400ZB0(3) |
| 50 | 850 | 450 | 1000 | 76 | 138 | 32 | 2000 | 5 | 40 | 3.2 | 9 | C44AMG(1)5500ZA0(3) |
| 60 | 850 | 450 | 1000 | 85 | 137 | 32 | 2400 | 5 | 40 | 3.2 | 5 | C44AMG(2)5600ZA0(3) |
| 1 | 1200 | 500 | 1600 | 45 | 80 | 15 | 300 | 2.5 | 300 | 17.7 | 60 | C44APF(1)4100ZA0(3) |
| 1.5 | 1200 | 500 | 1600 | 45 | 80 | 15 | 450 | 2.5 | 300 | 17.7 | 60 | C44APF(1)4150ZA0(3) |
| 2 | 1200 | 500 | 1600 | 45 | 80 | 15 | 600 | 2.5 | 300 | 17.7 | 60 | C44APF(1)4200ZD0(3) |
| 2.2 | 1200 | 500 | 1600 | 45 | 80 | 16 | 660 | 2 | 300 | 19.5 | 60 | C44APF(1)4220ZA0(3) |
| 2.5 | 1200 | 500 | 1600 | 45 | 80 | 18 | 750 | 2 | 300 | 15.4 | 60 | C44APF(1)4250ZA0(3) |
| 3 | 1200 | 500 | 1600 | 50 | 76 | 20 | 900 | 2 | 300 | 12.5 | 50 | C44APF(1)4300ZB0(3) |
| 4 | 1200 | 500 | 1600 | 50 | 101 | 20 | 1200 | 2 | 300 | 12.5 | 25 | C44APF(1)4400ZA0(3) |
| 5 | 1200 | 500 | 1600 | 50 | 101 | 22 | 1500 | 2 | 300 | 10.3 | 20 | C44APF(1)4500ZB0(3) |
| 5 | 1200 | 500 | 1600 | 50 | 138 | 40 | 2000 | 2 | 400 | 3.3 | 25 | C44APF(1)4500ZA0(3) |
| 6 | 1200 | 500 | 1600 | 55 | 101 | 25 | 1800 | 2 | 300 | 8 | 20 | C44APG(1)4600ZB0(3) |
| 6.8 | 1200 | 500 | 1600 | 60 | 101 | 25 | 2040 | 2 | 300 | 8 | 16 | C44APG(1)4680ZB0(3) |
| 7.5 | 1200 | 500 | 1600 | 50 | 138 | 25 | 2250 | 1.5 | 300 | 10.6 | 25 | C44APG(1)4750ZF0(3) |
| 8 | 1200 | 500 | 1600 | 55 | 138 | 25 | 2000 | 3.5 | 250 | 4.5 | 20 | C44APG(1)4800ZE0(3) |
| 10 | 1200 | 500 | 1600 | 55 | 138 | 25 | 2500 | 3 | 250 | 5.3 | 20 | C44APG(1)5100ZE0(3) |
| 10 | 1200 | 500 | 1600 | 60 | 138 | 50 | 3000 | 2 | 300 | 3.2 | 16 | C44APG(1)5100ZF0(3) |
| 10 | 1200 | 500 | 1600 | 65 | 158 | 60 | 3500 | 2 | 350 | 1.4 | 12 | C44APG(1)5100ZH0(3) |
| 15 | 1200 | 500 | 1600 | 76 | 138 | 32 | 3750 | 2.5 | 250 | 6.4 | 9 | C44APG(1)5150ZB0(3) |
| 20 | 1200 | 500 | 1600 | 85 | 137 | 32 | 5000 | 2.5 | 250 | 6.4 | 5 | C44APG(2)5200ZB0(3) |
| 22 | 1200 | 500 | 1600 | 76 | 200 | 50 | 6600 | 2.5 | 300 | 1.1 | 9 | C44APG(2)5220ZA0(3) |
| 1 | 1500 | 630 | 2000 | 45 | 80 | 15 | 700 | 2.5 | 400 | 17.7 | 60 | C44ASF(1)4100ZA0(3) |
| 2 | 1500 | 630 | 2000 | 50 | 76 | 16 | 800 | 2.5 | 400 | 15.6 | 50 | C44ASF(1)4200ZB0(3) |
| 3 | 1500 | 630 | 2000 | 50 | 101 | 22 | 1200 | 2 | 400 | 10.3 | 25 | C44ASF(1)4300ZA0(3) |
| 4 | 1500 | 630 | 2000 | 60 | 101 | 25 | 1600 | 2 | 400 | 8 | 16 | C44ASG(1)4400ZA0(3) |
| 5 | 1500 | 630 | 2000 | 65 | 101 | 25 | 2000 | 2 | 400 | 8 | 12 | C44ASG(1)4500ZB0(3) |
| 7.5 | 1500 | 630 | 2000 | 65 | 138 | 25 | 2250 | 3 | 300 | 5.3 | 12 | C44ASG(1)4750ZA0(3) |
| 10 | 1500 | 630 | 2000 | 70 | 138 | 32 | 3000 | 3 | 300 | 5.3 | 12 | C44ASG(1)5100ZA0(3) |
| 12 | 1500 | 630 | 2000 | 85 | 137 | 32 | 3600 | 3 | 300 | 5.3 | 5 | C44ASG(2)5120ZA0(3) |
| 15 | 1500 | 630 | 2000 | 85 | 137 | 32 | 4500 | 3 | 300 | 5.3 | 9 | C44ASG(2)5150ZA0(3) |
| Cap Value (µF) | VDC | VAC | Peak VDC | D | H | (A) | (A) | (mΩ) | dV/dt (V/µs) | (°C/W) | Packaging Quantity | Part Number |
| | | | | Dimensions (mm) | | Ripple Current | Peak Current | ESR (typ.) | | Thermal Resistance | | |

*(1) P = M6, Q = M8 (on request), 2 = Single Fast-On (on request), 3 = Double Fast-On (on request)*
*(2) R = M10, 2 = Single Fast-On (on request), 3 = Double Fast-On (on request)*
*(3) K = ±10%, J = ±5%*

## Environmental Compliance

As a leading global supplier of electronic components and an environmentally conscious company, KEMET continually aspires to improve the environmental effects of our manufacturing processes and our finished electronic components.

In Europe (RoHS Directive) and in some other geographical areas such as China (China RoHS), legislation has been enacted to prevent or otherwise limit the use of certain hazardous materials, including lead (Pb), in electronic equipment. KEMET monitors legislation globally to ensure compliance and endeavors to adjust our manufacturing processes and/or electronic components as may be required by applicable law.

For military, medical, automotive, and some commercial applications, the use of lead (Pb) in the termination is necessary and/or required by design. KEMET is committed to communicating RoHS compliance to our customers. Information related to RoHS compliance will be provided in data sheets and using specific identifiers on the packaging labels.

All KEMET power film capacitors are RoHS compliant.

## Marking

## Materials & Environment

The selection of raw materials that KEMET uses for the production of its electronic components is the result of extensive experience. KEMET directs specific attention toward environmental protection. KEMET selects its suppliers according to ISO 9001 standards and performs statistical analyses on raw materials before acceptance for use in manufacturing our electronic components. All materials are, to the best of KEMET's knowledge, non-toxic and free from cadmium; mercury; chrome and compounds; polychlorine triphenyl (PCB); bromide and chlorinedioxins bromurate clorurate; CFC and HCFC; and asbestos.

## Dissipation Factor

Dissipation factor is a complex function involved with capacitor inefficiency. The tgδ may vary up and down with increased temperature. For more information, refer to Performance Characteristics.

## Sealing

**Hermetically Sealed Capacitors**
As the temperature increases, the pressure inside the capacitor increases. If the internal pressure is high enough, it can cause a breach in the capacitor. Such a breach can result in leakage, impregnation, filling fluid, or moisture susceptibility.

**Barometric Pressure**
The altitude at which hermetically sealed capacitors are operated controls the capacitor's voltage rating. As the barometric pressure decreases, the susceptibility to terminal arc-over increases. Non-hermetic capacitors can be affected by internal stresses due to pressure changes. These effects can be in the form of capacitance changes, dielectric arc-over, and/or low insulation resistance. Altitude can also affect heat transfer. Heat that is generated in an operation cannot be dissipated properly, and high $RI^2$ losses and eventual failure can result.

## KEMET Electronics Corporation Sales Offices

For a complete list of our global sales offices, please visit www.kemet.com/sales.

## Disclaimer

All product specifications, statements, information and data (collectively, the "Information") in this datasheet are subject to change. The customer is responsible for checking and verifying the extent to which the Information contained in this publication is applicable to an order at the time the order is placed. All Information given herein is believed to be accurate and reliable, but it is presented without guarantee, warranty, or responsibility of any kind, expressed or implied.

Statements of suitability for certain applications are based on KEMET Electronics Corporation's ("KEMET") knowledge of typical operating conditions for such applications, but are not intended to constitute – and KEMET specifically disclaims – any warranty concerning suitability for a specific customer application or use. The Information is intended for use only by customers who have the requisite experience and capability to determine the correct products for their application. Any technical advice inferred from this Information or otherwise provided by KEMET with reference to the use of KEMET's products is given gratis, and KEMET assumes no obligation or liability for the advice given or results obtained.

Although KEMET designs and manufactures its products to the most stringent quality and safety standards, given the current state of the art, isolated component failures may still occur. Accordingly, customer applications which require a high degree of reliability or safety should employ suitable designs or other safeguards (such as installation of protective circuitry or redundancies) in order to ensure that the failure of an electrical component does not result in a risk of personal injury or property damage.

Although all product–related warnings, cautions and notes must be observed, the customer should not assume that all safety measures are indicted or that other measures may not be required.

*KEMET is a registered trademark of KEMET Electronics Corporation.*