Surface Mount Multilayer Ceramic Chip Capacitors (SMD MLCCs)

X7R with KONNEKT™ Technology, 25 – 3,000 VDC (Commercial & Automotive Grade)

KEMET a YAGEO company

RoHS Lead-free REACH COMPLIANT

KONNEKT™ High Density Packaging

Overview

KEMET's X7R with KONNEKT™ technology surface mount capacitors are designed for applications where higher capacitance and voltage are needed without requiring additional board space. KONNEKT high density packaging technology uses an innovative Transient Liquid Phase Sintering (TLPS) material to create a surface mount multi-chip solution for high density packaging.

KEMET's X7R dielectric features a 125°C maximum operating temperature and is considered temperature stable. The Electronics Components, Assemblies and Materials Association (EIA) characterizes X7R dielectric as a Class II material. Components of this classification are fixed, ceramic dielectric capacitors suited for bypass and decoupling applications or for frequencydiscriminating circuits where Q and stability of capacitance characteristics are not critical. X7R exhibits a predictable change in capacitance with respect to time and voltage, boasting a minimal change in capacitance with reference to ambient temperature.

Capacitance change is limited to ±15% from −55°C to +125°C.

In addition to their use in power supplies, these capacitors can be used in industries related to automotive (hybrid), telecommunications, medical, military, aerospace, semiconductors and test/diagnostic equipment. Automotive Grade devices are also available which meet the demanding Automotive Electronics Council's AEC-Q200 qualification requirements

For added reliability, KEMET's flexible termination technology is an available option that provides superior flex performance over standard termination systems. This technology was developed to address flex cracks, which are the primary failure mode of MLCCs and typically the result of excessive tensile and shear stresses produced during board flexure and thermal cycling. Flexible termination technology inhibits the transfer of board stress to the rigid body of the MLCC, therefore mitigating flex cracks which can result in low IR or short circuit failures.

Benefits

- Commercial and Automotive Grade (AEC-Q200)
- Industry-leading CV values
- Capacitance offerings ranging from 2.4 nF – 20 µF
- DC voltage ratings from 25 – 3,000 V
- EIA 1812 and 2220 case sizes
- Operating temperature range of −55°C to +125°C
- Low ESR and ESL
- Non-polar device, minimizing installation concerns
- Lead (Pb)-free, RoHS, and REACH compliant
- Surface mountable using standard MLCC reflow profiles
- Flexible termination option available.

Applications

- SMPS (Switch Mode Power Supplies)
- Lighting ballasts, HID lighting
- DC/DC Converters
- Telecom equipment
- Industrial and medical equipment
- Filters
- Snubbers
- DC Blocking
- Bypass

© KEMET Electronics Corporation • One East Broward Boulevard
Fort Lauderdale, FL 33301 USA • 954-766-2800 • www.kemet.com

Ordering Information

C	1812	C	944	K	C	R	L	C	XXXX
Ceramic	Case Size (L"x W")	Specification/ Series	Capacitance Code (pF)	Capacitance Tolerance	Rated Voltage (V)	Dielectric	Subclass Designation	Termination Finish	Orientation and Packaging (Suffix/C-Spec)
C	1812 2220	C = Standard X = Flexible Termination	Two single digits + number of zeros.	K = ±10% M = ±20%	3 = 25 V 5 = 50 V 1 = 100 V 2 = 200 V A = 250 V C = 500 V B = 630 V D = 1,000 V F = 1,500 V G = 2,000 V Z = 2,500 V H = 3,000 V	R = X7R	L = KONNEKT	C = 100% matte Sn	See "Packaging and Orientation C-Spec Ordering Options Table"

Additional termination finish options may be available. Contact KEMET for details.

Packaging C-Spec Ordering Options Table

Packaging Type	Mounting Orientation[1]	Packaging/Grade Ordering Code (C-Spec)
Commercial Grade		
7" Reel/Unmarked	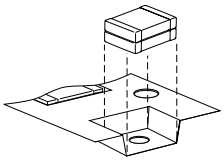	TU
13" Reel/Unmarked		7210
Automotive Grade		
7" Reel/Unmarked	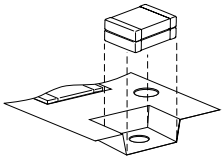	AUTO
13" Reel/Unmarked		AUTO7210

1 All parts are shipped in standard orientation which refers to the positioning of the KONNEKT capacitors in the Tape and Reel pockets.

Automotive C-Spec Information

KEMET automotive grade products meet or exceed the requirements outlined by the Automotive Electronics Council. Details regarding test methods and conditions are referenced in document AEC–Q200, Stress Test Qualification for Passive Components. These products are supported by a Product Change Notification (PCN) and Production Part Approval Process warrant (PPAP).

Automotive products offered through our distribution channel have been assigned an inclusive ordering code C-Spec, "AUTO." This C-Spec was developed in order to better serve small and medium-sized companies that prefer an automotive grade component without the requirement to submit a customer Source Controlled Drawing (SCD) or specification for review by a KEMET engineering specialist. This C-Spec is therefore not intended for use by KEMET OEM automotive customers and are not granted the same "privileges" as other automotive C-Specs. Customer PCN approval and PPAP request levels are limited (see details below.)

Product Change Notification (PCN)

The KEMET product change notification system is used to communicate primarily the following types of changes:

- Product/process changes that affect product form, fit, function, and/or reliability
- Changes in manufacturing site
- Product obsolescence

KEMET Automotive C-Spec	Customer Notification Due To:		Days Prior To Implementation
	Process/Product change	Obsolescence*	
KEMET assigned[1]	Yes (with approval and sign off)	Yes	180 days minimum
AUTO	Yes (without approval)	Yes	90 days minimum

[1] *KEMET assigned C-Specs require the submittal of a customer SCD or customer specification for review. For additional information contact KEMET.*

Production Part Approval Process (PPAP)

The purpose of the Production Part Approval Process is:

- To ensure that supplier can meet the manufacturability and quality requirements for the purchased parts.
- To provide the evidence that all customer engineering design records and specification requirements are properly understood and fulfilled by the manufacturing organization.
- To demonstrate that the established manufacturing process has the potential to produce the part.

KEMET Automotive C-Spec	PPAP (Product Part Approval Process) Level				
	1	2	3	4	5
KEMET assigned[1]	●	●	●	●	●
AUTO			○		

[1] *KEMET assigned C-Specs require the submittal of a customer SCD or customer specification for review. For additional information contact KEMET.*

● Part number specific PPAP available
○ Product family PPAP only

Dimensions – Millimeters (Inches)

Standard Mounting 2 Chips

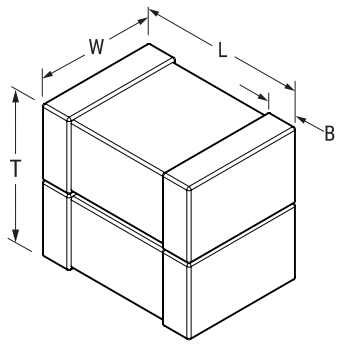

Number of Chips	EIA SIZE CODE	METRIC SIZE CODE	TERMINATION	L LENGTH	W WIDTH	T THICKNESS	B BANDWIDTH	Mounting Technique
2	1812	4532	Standard	4.50 (0.177) ±0.30 (0.012)	3.20 (0.126) ±0.30 (0.012)	See Table 1A for Thickness	0.60 (0.024) ±0.35 (0.014)	Solder Reflow Only
			Flexible	4.50 (0.178) ±0.40 (0.016)	3.20 (0.126) ±0.30 (0.012)		0.70 (0.028) ±0.35 (0.014)	
2	2220	5750	Standard	5.70 (0.224) ±0.40 (0.016)	5.00 (0.197) ±0.40 (0.016	See Table 1B for Thickness	0.60 (0.024) ±0.35 (0.014	Solder Reflow Only
			Flexible	5.90 (0.232) ±0.75 (0.030)	5.00 (0.197) ±0.40 (0.016)		0.70 (0.028) ±0.35 (0.014)	

Table 1A - 1812 Product Ordering Codes, Ratings, and Package Quantities

KEMET Part Number[1]	Capacitance	Cap Code	Voltage	Number of Chips	Thickness mm (inch)	Typical Average Piece Weight (g)	Tape & Reel Quantity	
							7" Tape & Reel	13" Tape & Reel
C1812(a)206(b)3RLC(c)	20 µF	206	25 V	2	3.30 (0.130) ±0.40 (0.16)	0.25	500	2,000
C1812(a)945(b)5RLC(c)	9.4 µF	945	50 V		3.30 (0.130) ±0.40 (0.16)	0.25	500	2,000
C1812(a)665(b)1RLC(c)	6.6 µF	665	100 V		3.90 (0.153) ±0.40 (0.16)	0.28	275	1,050
C1812(a)944(b)2RLC(c)	0.94 µF	944	200 V		3.50 (0.138) ±0.30 (0.12)	0.25	500	2,000
C1812(a)944(b)ARLC(c)	0.94 µF	944	250 V		3.50 (0.138) ±0.30 (0.12)	0.25	500	2,000
C1812(a)664(b)CRLC(c)	0.66 µF	664	500 V		4.30 (0.169) ±0.20 (0.008)	0.30	250	1,000
C1812(a)304(b)BRLC(c)	0.3 µF	304	630 V		3.50 (0.138) ±0.40 (0.16)	0.25	500	2,000
C1812(a)204(b)DRLC(c)	0.2 µF	204	1,000 V		3.50 (0.138) ±0.30 (0.12)	0.25	500	2,000
C1812(a)663(b)FRLC(c)	0.066 µF	663	1,500 V		5.10 (0.201) ±0.40 (0.16)	0.35	200	900
C1812(a)203(b)GRLC(c)	0.044 µF	203	2,000 V		5.10 (0.201) ±0.40 (0.016)	0.35	200	900
C1812(a)942(b)ZRLC(c)	0.0094 µF	942	2,500 V		5.10 (0.201) ±0.40 (0.016)	0.35	200	900
C1812(a)242(b)HRLC(c)	0.0024 µF	242	3,000 V		3.50 (0.138) ±0.30 (0.12)	0.35	500	2,000

1 Complete part number requires additional characters in the numbered positions provided in order to indicate capacitance tolerance and grade.
For each numbered position, available options are as follows:
(a) End Termination "C" or "X".
(b) Capacitance tolerance character "K" or "M."
(c) Product Grade: "TU" for Commercial or "AUTO" for Automotive

Table 1B - 2220 Product Ordering Codes, Ratings, and Package Quantities

KEMET Part Number[1]	Capacitance	Cap Code	Voltage	Number of Chips	Thickness mm (inch)	Typical Average Piece Weight (g)	Tape & Reel Quantity	
							7" Tape & Reel	13" Tape & Reel
C2220(a)206(b)5RLC(c)	20 µF	206	50 V	2	4.90 (0.193) ±0.30 (0.11)	0.78	225	900
C2220(a)205(b)1RLC(c)	2 µF	205	100 V		3.1 (0.122) ±0.30 (0.11)	0.47	500	1,925
C2220(a)205(b)2RLC(c)	2 µF	205	200 V		3.1 (0.122) ±0.30 (0.11)	0.47	500	1,925
C2220(a)205(b)ARLC(c)	2 µF	205	250 V		3.1 (0.122) ±0.30 (0.11)	0.47	500	1,925
C2220(a)944(b)CRLC(c)	0.94 µF	944	500 V		5.1 (0.200) ±0.40 (0.016)	0.81	300	1,250
C2220(a)664(b)BRLC(c)	0.66 µF	664	630 V		5.1 (0.200) ±0.40 (0.016)	0.80	300	1,250
C2220(a)244(b)DRLC(c)	0.24 µF	244	1,000 V		5.1 (0.200) ±0.40 (0.016)	0.80	300	1,250
C2220(a)164(b)FRLC(c)	0.16 µF	164	1,500 V		5.1 (0.200) ±0.40 (0.016)	0.79	300	1,250
C2220(a)443(b)GRLC(c)	0.044 µF	443	2,000 V		5.1 (0.200) ±0.40 (0.016)	0.80	300	1,250
C2220(a)303(b)ZRLC(c)	0.030 µF	303	2,500 V		5.1 (0.200) ±0.40 (0.016)	0.80	300	1,250
C2220(a)303(b)HRLC(c)	0.030 µF	303	3,000 V		5.1 (0.200) ±0.40 (0.016)	0.80	300	1,250

1 Complete part number requires additional characters in the numbered positions provided in order to indicate capacitance tolerance and grade.
For each numbered position, available options are as follows:
(a) End Termination "C" or "X".
(b) Capacitance tolerance character "K" or "M."
(c) Product Grade: "TU" for Commercial or "AUTO" for Automotive

Performance and Reliability: Test Methods and Conditions (Commercial Only)

<table>
<tr><th>Test</th><th>Reference</th><th>Test Condition</th><th>Limits</th></tr>
<tr><td>Visual and Mechanical</td><td>KEMET Internal</td><td>No defects that may affect performance (10X)</td><td>Dimensions according KEMET Spec Sheet</td></tr>
<tr><td>Capacitance (Cap)</td><td>KEMET Internal</td><td>C ≤ 10 µF 1 kHz ±50 Hz and 1.0 ±0.2 V_{rms}

C > 10 µF 120 Hz ±10 Hz and 0.5 ±0.1 V_{rms}

Capacitance measurements (including tolerance) are indexed to a referee time of 1,000 hours</td><td>Within Tolerance</td></tr>
<tr><td>Dissipation Factor (DF)</td><td>KEMET Internal</td><td>C ≤ 10 µF
Frequency: 1 kHz ±50 Hz
Voltage: 1.0 ±0.2 V_{rms},0.5 ±0.2 V_{rms}

C > 10 µF
Frequency: 120 Hz ±10 Hz
Voltage: 0.5 ±0.1 V_{rms}</td><td>Within Specification
<table>
<tr><th>EIA Case Size</th><th>Rated DC Voltage</th><th>Capacitance</th><th>Dissipation Factor (Maximum %)</th></tr>
<tr><td rowspan="2">1812</td><td rowspan="3">ALL</td><td>< 20 µF</td><td>2.5</td></tr>
<tr><td>20 µF</td><td>3.5</td></tr>
<tr><td>2220</td><td>ALL</td><td>2.5</td></tr>
</table></td></tr>
<tr><td>Insulation Resistance (IR)</td><td>KEMET Internal</td><td>Apply rated voltage for 120 seconds at 25°C</td><td>Within Specification

To obtain IR limit, divide MΩ-µF value by the capacitance and compare to GΩ limit. Select the lower of the two limits.
<table>
<tr><th>EIA Case Size</th><th>Rated DC Voltage</th><th>IR Limit</th></tr>
<tr><td rowspan="4">1812</td><td>25 – 100 V</td><td>500 megaohm microfarads or 10 GΩ</td></tr>
<tr><td>200 – 250 V</td><td>1,000 megaohm microfarads or 100 GΩ</td></tr>
<tr><td>500 – 1,000 V</td><td>100 megaohm microfarads or 10 GΩ</td></tr>
<tr><td>1,500 – 3,000 V</td><td>1,000 megaohm microfarads or 100 GΩ</td></tr>
<tr><td rowspan="4">2220</td><td>50 – 100 V</td><td>500 megaohm microfarads or 10 GΩ</td></tr>
<tr><td>200 – 250 V</td><td>1,000 megaohm microfarads or 100 GΩ</td></tr>
<tr><td>500 – 630 V</td><td>100 megaohm microfarads or 10 GΩ</td></tr>
<tr><td>1,000 – 3,000 V</td><td>1,000 megaohm microfarads or 100 GΩ</td></tr>
</table></td></tr>
<tr><td>Temperature Coefficient of Capacitance (TCC)</td><td>KEMET Internal</td><td>C ≤ 10µF
Frequency: 1 kHz ±50 Hz
Voltage*: 1.0 ±0.2 V_{rms}

C > 10µF
Frequency: 120 Hz ±10 Hz
Voltage: 0.5 ±0.1 V_{rms}

* See part number specification sheet for voltage
<table>
<tr><th>Step</th><th>Temperature (°C)</th></tr>
<tr><td>1</td><td>+25°C</td></tr>
<tr><td>2</td><td>−55°C</td></tr>
<tr><td>3</td><td>+25°C (Reference)</td></tr>
<tr><td>4</td><td>+125°C</td></tr>
</table></td><td>Capacitance ±15% over −55°C to +125°C</td></tr>
</table>

Performance and Reliability: Test Methods and Conditions (Commercial Only) cont.

<table>
<tr><th>Test</th><th>Reference</th><th>Test Condition</th><th>Limits</th></tr>
<tr><td>Dielectric Withstanding Voltage (DWV)</td><td>KEMET Internal</td><td>
<table>
<tr><th>Rated DC Voltage</th><th>DWV Voltage (% of Rated)</th></tr>
<tr><td>< 500</td><td>250%</td></tr>
<tr><td>500/630</td><td>150%</td></tr>
<tr><td>≥ 1,000</td><td>120%</td></tr>
</table>
(5 ±1 seconds and charge/discharge not exceeding 50 mA)
</td><td>Cap: Initial Limit
DF: Initial Limit
IR: Initial Limit

Withstand test voltage without insulation breakdown or damage.</td></tr>
<tr><td>Aging Rate (Maximum % Capacitance Loss/Decade Hour)</td><td>KEMET Internal</td><td>Capacitance measurements (including tolerance) are indexed to a referee time of 1,000 hours.
Please refer to a part number specific datasheet for referee time details.</td><td>3% Loss/Decade Hour</td></tr>
<tr><td>Terminal Strength</td><td>KEMET Internal</td><td>Shear stress test per specific case size, Time: 60±1 seconds
<table>
<tr><th>Case Size</th><th>Force</th></tr>
<tr><td>1812</td><td rowspan="2">18N</td></tr>
<tr><td>2220</td></tr>
</table>
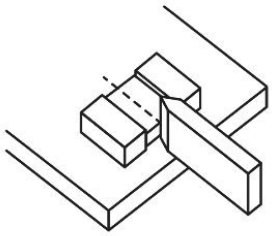 </td><td>No evidence of mechanical damage</td></tr>
<tr><td>Board Flex</td><td>AEC-Q200-005</td><td>Standard Termination System 2.0 mm
Flexible Termination System 3.0 mm
Test time: 60± 5 seconds
Ramp time: 1 mm/second
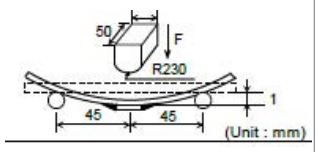
</td><td>No evidence of mechanical damage</td></tr>
<tr><td>Solderability</td><td>KEMET Custom Test</td><td>1. Board shear – SAC305 solder. Shear force of 1.8 kg (minimum)
2. Wetting balance – IEC 60068–2–69</td><td>Visual Inspection.
95% coverage on termination.
No leaching</td></tr>
<tr><td>Temperature Cycling</td><td>JESD22 Method JA-104</td><td>1,000 cycles (−55°C to +125°C)
2 – 3 cycles per hour
Soak Time 1 or 5 minutes</td><td>Measurement at 24 hours ±4 hours after test conclusion.
Cap: Initial Limit
DF: Initial Limit
IR: Initial Limit</td></tr>
</table>

Performance and Reliability: Test Methods and Conditions (Commercial Only) cont.

<table>
<tr><th>Test</th><th>Reference</th><th>Test Condition</th><th>Limits</th></tr>
<tr><td>Biased Humidity</td><td>MIL-STD-202 Method 103</td><td>Load Humidity:
1,000 hours 85°C/85% RH and 200 VDC maximum.

Low Volt Humidity:
1,000 hours 85°C/85% RH and 1.5 V.</td><td>Measurement at 24 hours ±4 hours after test conclusion.
Within Post Environmental Limits
Cap: ±20% shift
IR: 10% of Initial Limit

<table><tr><th colspan="2">DF Limits Maximum (%)</th></tr><tr><th>Initial</th><th>Post</th></tr><tr><td>2.5</td><td>3.0</td></tr><tr><td>3.5</td><td>5.0</td></tr></table></td></tr>
<tr><td>Moisture Resistance</td><td>MIL-STD-202 Method 106</td><td>Number of cycles required 10, 24 hours per cycle.
Steps 7a and 7b not required.</td><td>Measurement at 24 hours ±4 hours after test conclusion.
Within Post Environmental Limits
Cap: ±20% shift
IR: 10% of Initial Limit

<table><tr><th colspan="2">DF Limits Maximum (%)</th></tr><tr><th>Initial</th><th>Post</th></tr><tr><td>2.5</td><td>3.0</td></tr><tr><td>3.5</td><td>5.0</td></tr></table></td></tr>
<tr><td>Thermal Shock</td><td>MIL-STD-202 Method 107</td><td>Number of cycles required 5, (−55°C to 125°C)
Dwell time 15 minutes.</td><td>Cap: Initial Limit
DF: Initial Limit
IR: Initial Limit</td></tr>
<tr><td>High Temperature Life</td><td rowspan="2">MIL-STD-202 Method 108</td><td>1,000 hours at 125°C with 1.0 X rated voltage applied</td><td rowspan="2">Within Post Environmental Limits
Cap: ±20% shift
IR: 10% of Initial Limit

<table><tr><th colspan="2">DF Limits Maximum (%)</th></tr><tr><th>Initial</th><th>Post</th></tr><tr><td>2.5</td><td>3.0</td></tr><tr><td>3.5</td><td>5.0</td></tr></table></td></tr>
<tr><td>Storage Life</td><td>1,000 hours at 125°C, Unpowered</td></tr>
</table>

Performance and Reliability: Test Methods and Conditions (Commercial Only) cont.

Test	Reference	Test Condition	Limits
Vibration	MIL-STD-202 Method 204	5 g's for 20 minutes, 12 cycles each of 3 orientations. Test from 10 – 2,000 Hz	Cap: Initial Limit DF: Initial Limit IR: Initial Limit
Mechanical Shock	MIL-STD-202 Method 213	1,500 g's 0.5 ms Half-sine, Velocity Change 15.4 feet/second (Condition F)	Cap: Initial Limit DF: Initial Limit IR: Initial Limit
Resistance to Solvents	MIL-STD-202 Method 215	Add Aqueous wash chemical OKEMCLEAN (A 6% concentrated Oakite cleaner) or equivalent. Do not use banned solvents.	Visual Inspection 10X Readable marking, no decoloration or stains. No physical damage.

Environmental Compliance

Lead (Pb)-free, RoHS, and REACH compliant without exemptions.

Land Pattern Design Recommendations per IPC-7351 (mm)

Chip Number	Mounting	EIA SIZE CODE	METRIC SIZE CODE	END TERMINATION	Median (Nominal) Land Protrusion				
					C	Y	X	V1	V2
2	Standard	1812	4532	Standard	2.05	1.40	3.50	6.00	4.00
				Flexible	2.00	1.60	3.50	6.10	4.00
2	Standard	2220	5750	Standard	2.65	1.50	5.40	7.30	5.90
				Flexible	2.75	1.90	5.40	7.90	5.90

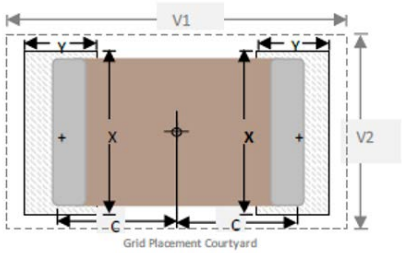

Soldering Process

Recommended Reflow Soldering Profile

KEMET's KONNEKT family of high density surface mount multilayer ceramic capacitors (SMD MLCCs) are compatible with convection and IR reflow techniques. Preheating of these components is recommended to avoid extreme thermal stress. KEMET's recommended profile conditions for convection and IR reflow reflect the profile conditions of the IPC/J-STD-020 standard for moisture sensitivity testing. These devices can safely withstand a maximum of three reflow passes at these conditions.

Profile Feature	Termination Finish
	100% matte Sn
Preheat/Soak Temperature Minimum (T_{Smin}) Temperature Maximum (T_{Smax}) Time (t_S) from T_{Smin} to T_{Smax}	 150°C 200°C 60 – 120 seconds
Ramp-Up Rate (T_L to T_P)	3°C/second maximum
Liquidous Temperature (T_L)	217°C
Time Above Liquidous (t_L)	60 – 150 seconds
Peak Temperature (T_P)	260°C
Time Within 5°C of Maximum Peak Temperature (t_P)	30 seconds maximum
Ramp-Down Rate (T_P to T_L)	6°C/second maximum
Time 25°C to Peak Temperature	8 minutes maximum

Note: All temperatures refer to the center of the package, measured on the capacitor body surface that is facing up during assembly reflow.

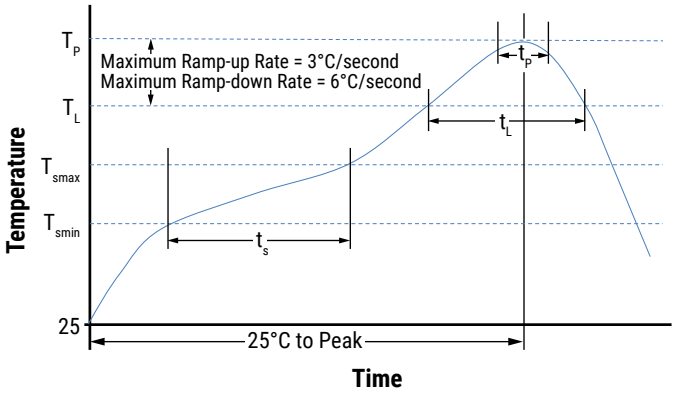

Hand Soldering and Removal of KONNEKT Capacitors

The preferred method of attachment for KEMET's KONNEKT Capacitors is IR or convection reflow where temperature, time and air flow are well controlled.

However, it is understood that the manual attachment of KONNEKT capacitors is necessary for prototype and lab testing. In these instances, care must be taken not to introduce excessive temperature gradients in the KONNEKT part type that may lead to cracking in the ceramic or separation of the TLPS material.

Please see KEMET's KONNEKT Soldering Guidelines here.

Storage & Handling

Ceramic chip capacitors should be stored in normal working environments. While the chips themselves are quite robust in other environments, solderability will be degraded by exposure to high temperatures, high humidity, corrosive atmospheres, and long term storage. In addition, packaging materials will be degraded by high temperature – reels may soften or warp and tape peel force may increase. KEMET recommends that maximum storage temperature not exceed 40°C and maximum storage humidity not exceed 70% relative humidity. In addition, temperature fluctuations should be minimized to avoid condensation on the parts and atmospheres should be free of chlorine and sulfur bearing compounds. For optimized solderability chip stock should be used promptly, preferably within 1.5 years upon receipt.

Construction – Standard Termination

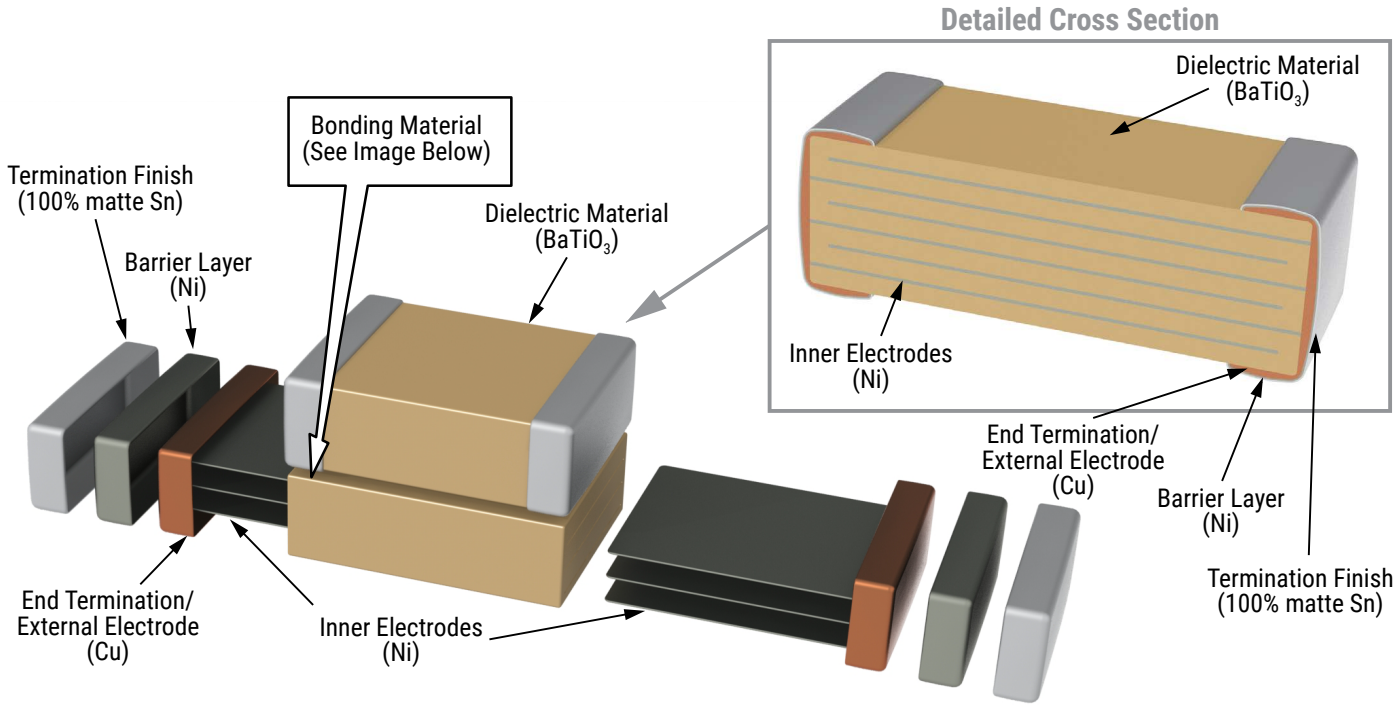

Construction – Flexible Termination

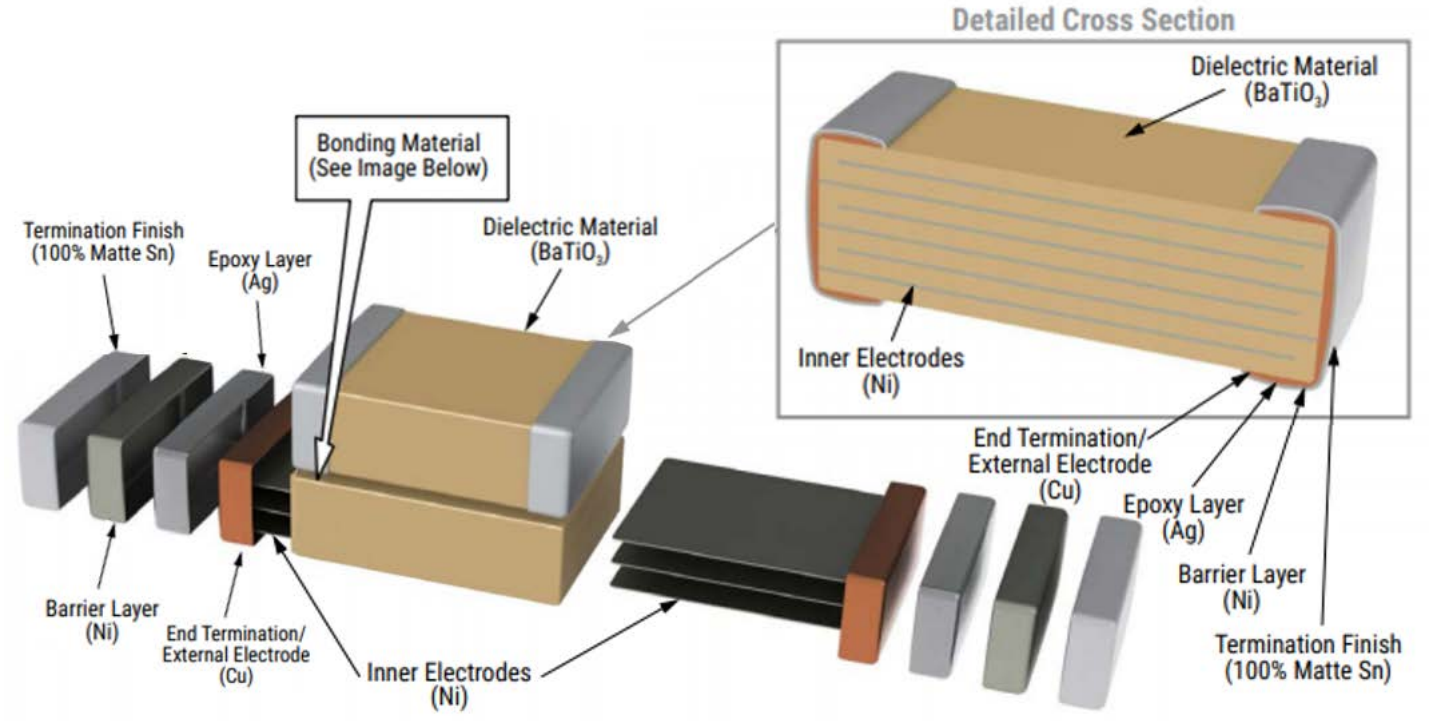

Bonding Material

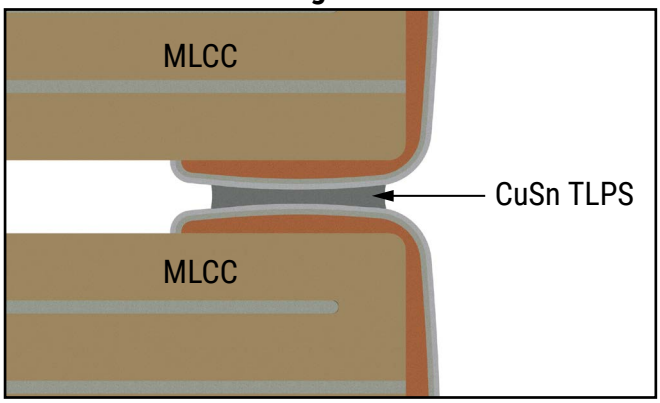

Tape & Reel Packaging Information

KEMET offers X7R with KONNEKT technology capacitors packaged in 16 mm tape on 7" and 13" reels in accordance with EIA Standard 481. This packaging system is compatible with all tape-fed automatic pick and place systems.

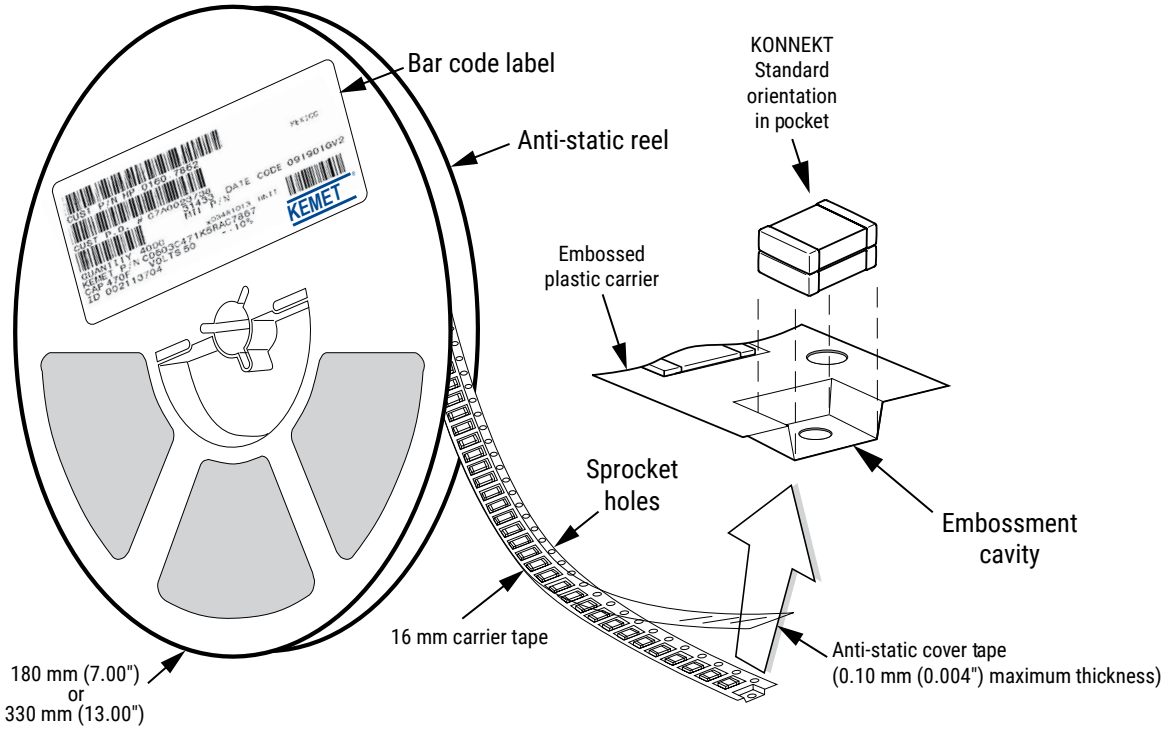

Table 4 – Carrier Tape Configuration, Embossed Plastic (mm)

EIA Case Size	Number of Chips	Chip Thickness	Tape Size (W)[1]	Embossed Plastic	
				7" Reel	13" Reel
				Pitch (P_1)[2]	
KONNEKT 1812	2	≤ 3.5 mm	16	8	8
		> 3.5 mm		12	12
KONNEKT 2220	2	≤ 3.5 mm >5.0 mm & ≤ 5.3 mm	16	8	8
		> 3.5 mm ≤ 5.0		12	12

1. Refer to Figures 1 and 2 for W and P_1 carrier tape reference locations.
2. Refer to Tables 4 and 5 for tolerance specifications.

Figure 1 – Embossed (Plastic) Carrier Tape Dimensions

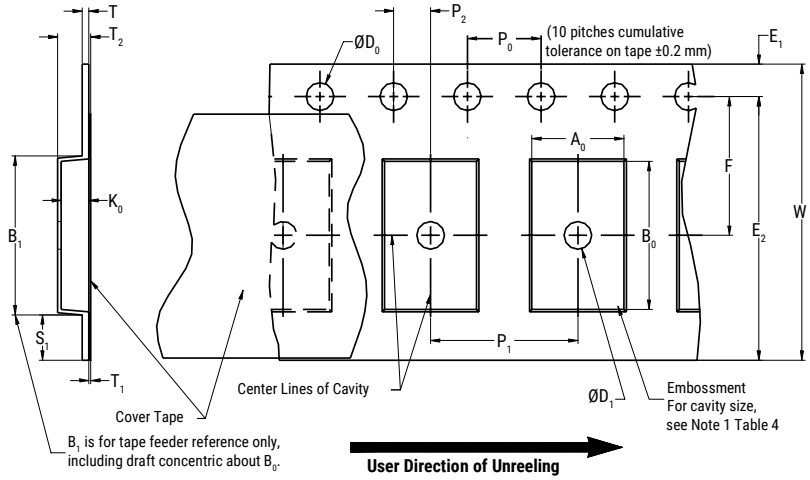

Table 5 – Embossed (Plastic) Carrier Tape Dimensions

Metric will govern

Constant Dimensions — Millimeters (Inches)									
Tape Size	D_0	D_1 Minimum Note 1	E_1	P_0	P_2	R Reference Note 2	S_1 Minimum Note 3	T Maximum	T_1 Maximum
16 mm	1.5 +0.10/−0.0 (0.059 +0.004/−0.0)	1.5 (0.059)	1.75±0.10 (0.069±0.004)	4.0±0.10 (0.157±0.004)	2.0±0.05 (0.079±0.002)	30 (1.181)	0.600 (0.024)	0.600 (0.024)	0.100 (0.004)

Variable Dimensions — Millimeters (Inches)										
Case Size	Number of Chips	Tape Size	Pitch	B_1 Maximum Note 4	E_2 Minimum	F	P_1	T_2 Maximum	W Maximum	A_0,B_0 & K_0
1812	2	16 mm	Triple (12mm)	7.9 (0.311)	14.25 (0.561)	7.5±0.05 (0.138±0.002)	12.0±0.10 (0.472±0.004)	6.5 (0.256)	16.3 (0.642)	Note 5
			Double (8mm)	7.5 (0.295)			8.0±0.10 (0.315±0.004)			
2220	2	16 mm	Triple (12mm)	8.5 (0.335)	14.25 (0.561)	7.5±0.05 (0.138±0.002)	12.0±0.10 (0.472±0.004)	6.5 (0.256)	16.3 (0.642)	Note 5
			Double (8mm)	9.2 (0.363)			8.0±0.10 (0.315±0.004)			

1. The embossment hole location shall be measured from the sprocket hole controlling the location of the embossment. Dimensions of embossment location and hole location shall be applied independent of each other.
2. The tape with or without components shall pass around R without damage (see Figure 6).
3. If S_1 < 1.0 mm, there may not be enough area for cover tape to be properly applied. See EIA Document 481, Paragraph 4.3 (b).
4. B_1 dimension is a reference dimension for tape feeder clearance only.
5. The cavity defined by A_0, B_0 and K_0 shall surround the component with sufficient clearance that:
(a) the component does not protrude above the top surface of the carrier tape.
(b) the component can be removed from the cavity in a vertical direction without mechanical restriction, after the top cover tape has been removed.
(c) rotation of the component is limited to 20° maximum for 8 and 12 mm tapes and 10° maximum for 16 mm tapes (see Figure 3).
(d) lateral movement of the component is restricted to 0.5 mm maximum for 8 mm and 12 mm wide tape and to 1.0 mm maximum for 16 mm tape (see Figure 4).
(e) For KPS product, A_0 and B_0 are measured on a plane 0.3 mm above the bottom of the pocket.
(f) see Addendum in EIA Document 481 for standards relating to more precise taping requirements.

Packaging Information Performance Notes

1. Cover Tape Break Force: 1.0 kg minimum.
2. Cover Tape Peel Strength: The total peel strength of the cover tape from the carrier tape shall be:

Tape Width	Peel Strength
16 mm	0.1 to 1.3 newton (10 to 130 gf)

The direction of the pull shall be opposite the direction of the carrier tape travel. The pull angle of the carrier tape shall be 165° to 180° from the plane of the carrier tape. During peeling, the carrier and/or cover tape shall be pulled at a velocity of 300±10 mm/minute.
3. Labeling: Bar code labeling (standard or custom) shall be on the side of the reel opposite the sprocket holes. *Refer to EIA Standards 556 and 624*.

Figure 2 – Maximum Component Rotation

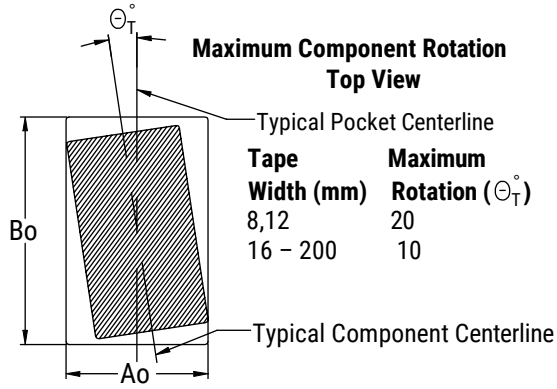

Tape Width (mm)	Maximum Rotation (Θ_T°)
8,12	20
16 – 200	10

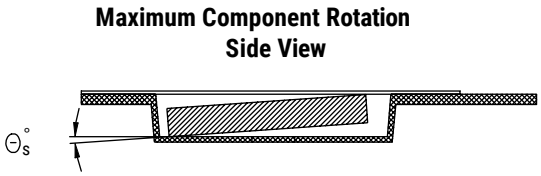

Tape Width (mm)	Maximum Rotation (Θ_S°)
8,12	20
16 – 56	10
72 – 200	5

Figure 3 – Maximum Lateral Movement

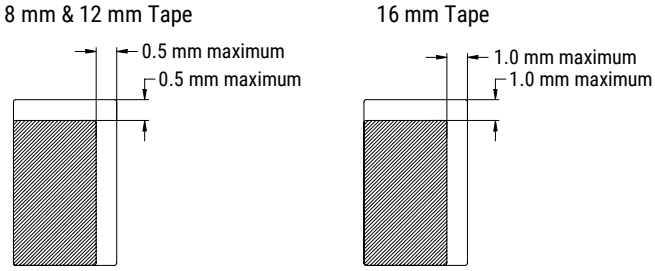

Figure 5 – Reel Dimensions

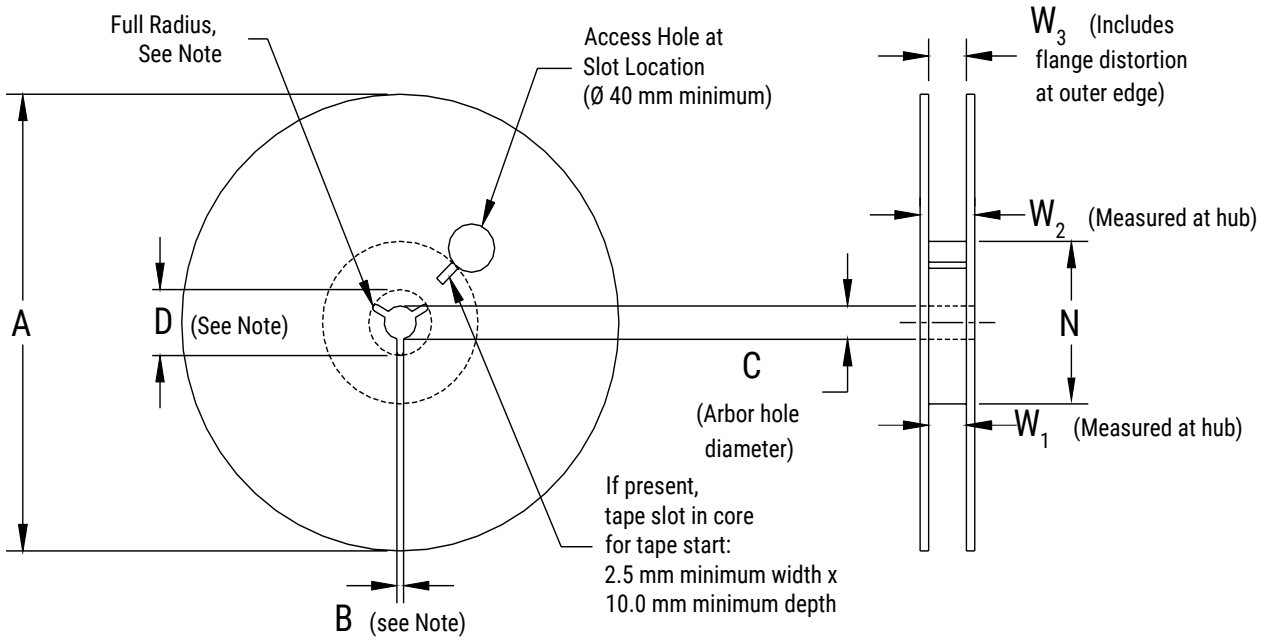

Note: Drive spokes optional; if used, dimensions B and D shall apply.

Table 6 – Reel Dimensions

Metric will govern

Constant Dimensions — Millimeters (Inches)				
Tape Size	A	B Minimum	C	D Minimum
16 mm	178±0.20 (7.008±0.008) or 330±0.20 (13.000±0.008)	1.5 (0.059)	13.0 +0.5/−0.2 (0.521 +0.02/−0.008)	20.2 (0.795)
Variable Dimensions — Millimeters (Inches)				
Tape Size	N Minimum See Note 2, Tables 2-3	W_1	W_2 Maximum	W_3
16 mm	50 (1.969)	16.4 +2.0/−0.0 (0.646 +0.078/−0.0)	22.4 (0.882)	Shall accommodate tape width without interference

Figure 6 – Tape Leader & Trailer Dimensions

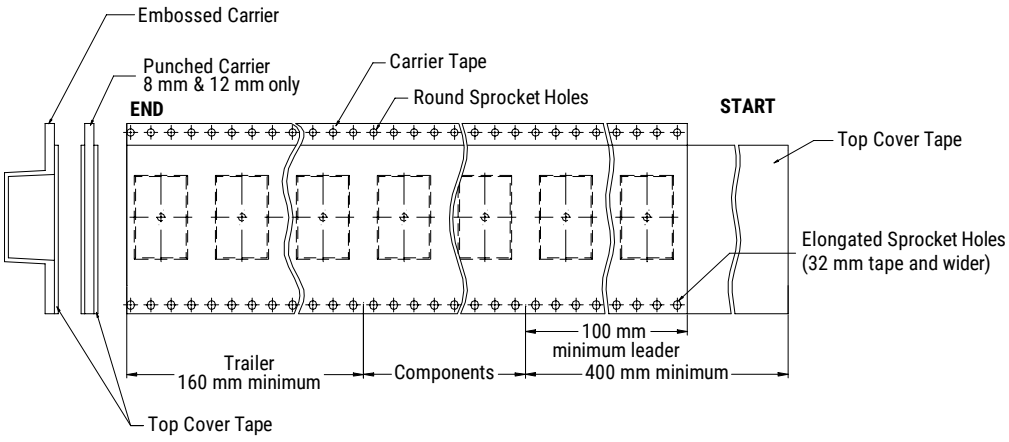

Figure 7 – Maximum Camber

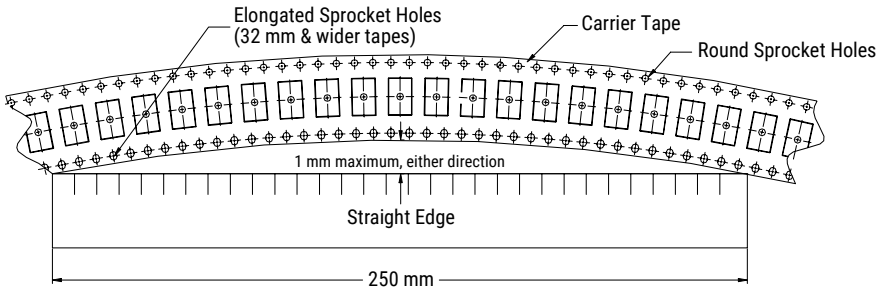

KEMET Electronics Corporation Sales Offices

For a complete list of our global sales offices, please visit www.kemet.com/sales.

Disclaimer

YAGEO Corporation and its affiliates do not recommend the use of commercial or automotive grade products for high reliability applications or manned space flight.

All product specifications, statements, information and data (collectively, the "Information") in this datasheet are subject to change. The customer is responsible for checking and verifying the extent to which the Information contained in this publication is applicable to an order at the time the order is placed. All Information given herein is believed to be accurate and reliable, but it is presented without guarantee, warranty, or responsibility of any kind, expressed or implied.

Statements of suitability for certain applications are based on KEMET Electronics Corporation's ("KEMET") knowledge of typical operating conditions for such applications, but are not intended to constitute – and KEMET specifically disclaims – any warranty concerning suitability for a specific customer application or use. The Information is intended for use only by customers who have the requisite experience and capability to determine the correct products for their application. Any technical advice inferred from this Information or otherwise provided by KEMET with reference to the use of KEMET's products is given gratis, and KEMET assumes no obligation or liability for the advice given or results obtained.

Although KEMET designs and manufactures its products to the most stringent quality and safety standards, given the current state of the art, isolated component failures may still occur. Accordingly, customer applications which require a high degree of reliability or safety should employ suitable designs or other safeguards (such as installation of protective circuitry or redundancies) in order to ensure that the failure of an electrical component does not result in a risk of personal injury or property damage.

Although all product–related warnings, cautions and notes must be observed, the customer should not assume that all safety measures are indicated or that other measures may not be required.

KEMET is a registered trademark of KEMET Electronics Corporation.