# High Voltage with Flexible Termination System (HV FT-CAP), C0G Dielectric, 500 – 10,000 VDC (Commercial Grade)

## Overview

KEMET's High Voltage with Flexible Termination (HV FT-CAP) surface mount MLCCs in C0G dielectric address the primary failure mode of MLCCs–flex cracks. These devices utilize a pliable and conductive silver epoxy between the base metal and nickel barrier layers of the termination system which inhibits the transfer of board stress to the rigid ceramic body, therefore mitigating flex cracks which can result in low IR or short circuit failures.

Flexible termination technology provides superior flex performance over standard termination systems. C0G (NP0) dielectric capacitors exhibit no change in capacitance with respect to time and voltage and boasts a negligible change in capacitance with reference to ambient temperature. Capacitance change is limited to ±30ppm/°C from −55°C to +125°C. These devices exhibit low ESR at high frequencies and find conventional use as snubbers or filters in applications such as switching power supplies and lighting ballasts.

## Benefits

- Operating temperature range of −55°C to +125°C
- Superior flex performance (up to 5 mm)
- Capacitance offerings ranging from 1 pF to 120 nF
- DC voltage ratings of 500 V, 630 V, 1 KV, 1.5 KV, 2 KV, 2.5 KV, 3 KV and 10KV
- EIA 0603, 0805, 1206, 1210, 1808, 1812, 1825, 2220 and 2225
- Extremely low ESR and ESL
- High ripple current capability
- No capacitance shift with voltage
- Negligible capacitance shift with respect to temperature
- No piezoelectric noise
- Lead (Pb)-Free, RoHS and REACH compliant

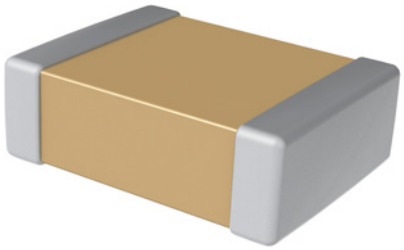

## Applications

- High frequency power converters
- Wide bandgap (WBG), silicon carbide (SiC) and gallium nitride (GaN) systems
- Snubber (high dV/dT)
- Resonant circuits (LLC, Wireless Charging, etc)
- Timing
- Filtering


© KEMET Electronics Corporation • One East Broward Boulevard
Fort Lauderdale, FL 33301 USA • 954-766-2800 • www.kemet.com

## Ordering Information

| C | 2225 | X | 393 | J | C | G | A | C | TU |
|---|---|---|---|---|---|---|---|---|---|
| Ceramic | Case Size (L" x W") | Specification/ Series | Capacitance Code (pF) | Capacitance Tolerance[1] | Rated Voltage (VDC) | Dielectric | Failure Rate/ Design | Termination Finish[2] | Packaging/Grade (C-Spec) |
| | 0603<br>0805<br>1206<br>1210<br>1808<br>1812<br>1825<br>2220<br>2225 | X = Flexible Termination | Two significant digits and number of zeros. | B = ±0.10 pF<br>C = ±0.25 pF<br>D = ±0.5 pF<br>F = ±1%<br>G = ±2%<br>J = ±5%<br>K = ±10%<br>M = ±20% | C = 500<br>B = 630<br>D = 1,000<br>F = 1,500<br>G = 2,000<br>Z = 2,500<br>H = 3,000<br>K = 10,000 | G = C0G | A = N/A | C = 100% Matte Sn<br>L = SnPb (5% Pb minimum) | See "Packaging C-Spec Ordering Options Table" |

*[1] Additional capacitance tolerance offerings may be available. Contact KEMET for details.*
*[2] Additional termination finish options may be available. Contact KEMET for details.*

## Packaging C-Spec Ordering Options Table

| Packaging Type[1] | Packaging/Grade Ordering Code (C-Spec) |
|---|---|
| Commercial Grade[1] | |
| Bulk Bag | Not required (Blank) |
| 7" Reel/Unmarked | TU |
| 13" Reel/Unmarked | 7411 (EIA 0603 and smaller case sizes)<br>7210 (EIA 0805 and larger case sizes) |
| Automotive Grade[2] | |
| 7" Reel | AUTO |
| 13" Reel/Unmarked | AUTO7411 (EIA 0603 and smaller case sizes)<br>AUTO7210 (EIA 0805 and larger case sizes) |

*[1] Default packaging is "Bulk Bag". An ordering code C-Spec is not required for "Bulk Bag" packaging.*
*[1] The terms "Marked" and "Unmarked" pertain to laser marking option of capacitors. All packaging options labeled as "Unmarked" will contain capacitors that have not been laser marked. The option to laser mark is not available on these devices. For more information see "Capacitor Marking".*
*[2] Reeling tape options (Paper or Plastic) are dependent on capacitor case size (L" x W") and thickness dimension. See "Chip Thickness/Tape & Reel Packaging Quantities" and "Tape & Reel Packaging Information".*
*[2] For additional Information regarding "AUTO" C-Spec options, see "Automotive C-Spec Information".*
*[2] All Automotive packaging C-Specs listed exclude the option to laser mark components. The option to laser mark is not available on these devices. For more information see "Capacitor Marking".*

## Dimensions – Millimeters (Inches)

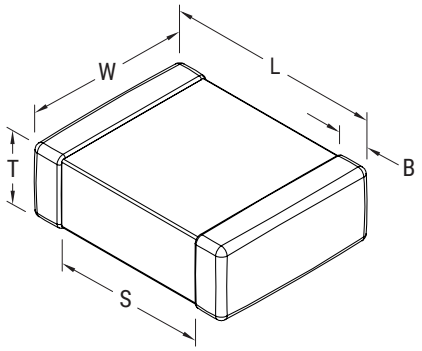


| EIA Size Code | Metric Size Code | L Length | W Width | T Thickness | B Bandwidth | S Separation Minimum | Mounting Technique |
|---|---|---|---|---|---|---|---|
| 0603 | 1608 | 1.60 (0.063) ±0.15 (0.006) | 0.80 (0.032) ±0.15 (0.006) | See Table 2 for Thickness | 0.35 (0.014) ±0.15 (0.006) | 0.40 (0.016) | Solder Wave or Solder Reflow |
| 0805 | 2012 | 2.00 (0.079) ±0.30 (0.012) | 1.25 (0.049) ±0.30 (0.012) | | 0.50 (0.02) ±0.25 (0.010) | 0.60 (0.024) | |
| 1206 | 3216 | 3.30 (0.130) ±0.40 (0.016) | 1.60 (0.063) ±0.35 (0.013) | | 0.60 (0.024) ±0.25 (0.010) | 1.50 (0.060) | |
| 1210 | 3225 | 3.30 (0.130) ±0.40 (0.016) | 2.60 (0.102) ±0.30 (0.012) | | 0.60 (0.024) ±0.25 (0.010) | 1.50 (0.060) | Solder Reflow Only |
| 1808 | 4520 | 4.70 (0.185) ±0.50 (0.020) | 2.00 (0.079) ±0.20 (0.008) | | 0.70 (0.028) ±0.35 (0.014) | 2.90 (0.114) | |
| 1812 | 4532 | 4.50 (0.178) ±0.40 (0.016) | 3.20 (0.126) ±0.30 (0.012) | | 0.70 (0.028) ±0.35 (0.014) | 2.30 (0.091) | |
| 1825 | 4564 | 4.60 (0.181) ±0.40 (0.016) | 6.40 (0.252) ±0.40 (0.016) | | 0.70 (0.028) ±0.35 (0.014) | 2.30 (0.091) | |
| 2220 | 5650 | 5.90 (0.232) ±0.75 (0.030) | 5.00 (0.197) ±0.40 (0.016) | | 0.70 (0.028) ±0.35 (0.014) | 3.50 (0.138) | |
| 2225 | 5664 | 5.90 (0.232) ±0.75 (0.030) | 6.40 (0.248) ±0.40 (0.016) | | 0.70 (0.028) ±0.35 (0.014) | 3.20 (0.126) | |

## Qualification/Certification

Commercial Grade products are subject to internal qualification. Details regarding test methods and conditions are referenced in Table 4, Performance and Reliability.

## Environmental Compliance

Lead (Pb)-free, RoHS, and REACH compliant without exemptions (excluding SnPb termination finish option).

# Table 1A – Capacitance Range/Selection Waterfall (0603 – 1808 Case Sizes)

| Capacitance | Cap Code | Case Size/Series | C0603X | | | C0805X | | | C1206X | | | | | C1210X | | | | | C1808X | | | | | | |
|---|---|---|---|---|---|---|---|---|---|---|---|---|---|---|---|---|---|---|---|---|---|---|---|---|---|
| | | Voltage Code | C | B | D | C | B | D | C | B | D | F | G | C | B | D | F | G | C | B | D | F | G | Z | H |
| | | Rated Voltage (VDC) | 500 | 630 | 1000 | 500 | 630 | 1000 | 500 | 630 | 1000 | 1500 | 2000 | 500 | 630 | 1000 | 1500 | 2000 | 500 | 630 | 1000 | 1500 | 2000 | 2500 | 3000 |
| | | Capacitance Tolerance | Product Availability and Chip Thickness Codes See Table 2 for Chip Thickness Dimensions | | | | | | | | | | | | | | | | | | | | | | |
| 1.0 - 9.1 pF* | 109 - 169* | B C D | | | | DG | DG | DG | | | | | | | | | | | LB | LB | LB | LB | LB | LB | LB |
| 10 pF | 100 | F G J K M | | | | DG | DG | DG | ES | ES | ES | ES | ES | FM | FM | FM | FM | FM | LB | LB | LB | LB | LB | LB | LB |
| 11 pF | 110 | F G J K M | | | | DG | DG | DG | ES | ES | ES | ES | ES | FM | FM | FM | FM | FM | LB | LB | LB | LB | LB | LB | LB |
| 12 pF | 120 | F G J K M | | | | DG | DG | DG | ES | ES | ES | ES | ES | FM | FM | FM | FM | FM | LB | LB | LB | LB | LB | LB | LB |
| 13 pF | 130 | F G J K M | | | | DG | DG | DG | ES | ES | ES | ES | ES | FM | FM | FM | FM | FM | LB | LB | LB | LB | LB | LB | LB |
| 15 pF | 150 | F G J K M | | | | DG | DG | DG | ES | ES | ES | ES | ES | FM | FM | FM | FM | FM | LB | LB | LB | LB | LB | LB | LB |
| 16 pF | 160 | F G J K M | | | | DG | DG | DG | ES | ES | ES | ES | ES | FM | FM | FM | FM | FM | LB | LB | LB | LB | LB | LB | LB |
| 18 pF | 180 | F G J K M | | | | DG | DG | DG | ES | ES | ES | ES | ES | FM | FM | FM | FM | FM | LB | LB | LB | LB | LB | LB | LB |
| 20 pF | 200 | F G J K M | | | | DG | DG | DG | ES | ES | ES | ES | ES | FM | FM | FM | FM | FM | LB | LB | LB | LB | LB | LB | LB |
| 22 pF | 220 | F G J K M | | | | DG | DG | DG | ES | ES | ES | ES | ES | FM | FM | FM | FM | FM | LB | LB | LB | LB | LB | LB | LB |
| 24 pF | 240 | F G J K M | | | | DG | DG | DG | ES | ES | ES | ES | ES | FM | FM | FM | FM | FM | LB | LB | LB | LB | LB | LB | LB |
| 27 pF | 270 | F G J K M | | | | DG | DG | DG | ES | ES | ES | ES | ES | FM | FM | FM | FM | FM | LB | LB | LB | LB | LB | LB | LB |
| 30 pF | 300 | F G J K M | | | | DG | DG | DG | ES | ES | ES | ES | ES | FM | FM | FM | FM | FM | LB | LB | LB | LB | LB | LB | LB |
| 33 pF | 330 | F G J K M | | | | DG | DG | DG | ES | ES | ES | ES | ES | FM | FM | FM | FM | FM | LB | LB | LB | LB | LB | LB | LB |
| 36 pF | 360 | F G J K M | | | | DG | DG | DG | ES | ES | ES | ES | ES | FM | FM | FM | FM | FM | LB | LB | LB | LB | LB | LB | LB |
| 39 pF | 390 | F G J K M | | | | DG | DG | DG | ES | ES | ES | ES | ES | FM | FM | FM | FM | FM | LB | LB | LB | LB | LB | LB | LB |
| 43 pF | 430 | F G J K M | | | | DG | DG | DG | ES | ES | ES | ES | ES | FM | FM | FM | FM | FM | LB | LB | LB | LB | LB | LB | LB |
| 47 pF | 470 | F G J K M | | | | DG | DG | DG | ES | ES | ES | ES | ES | FM | FM | FM | FM | FM | LB | LB | LB | LB | LB | LB | LB |
| 51 pF | 510 | F G J K M | | | | DG | DG | DG | ES | ES | ES | ES | ES | FM | FM | FM | FM | FM | LB | LB | LB | LB | LB | LB | LB |
| 56 pF | 560 | F G J K M | | | | DG | DG | DG | ES | ES | ES | ES | ES | FM | FM | FM | FM | FM | LB | LB | LB | LB | LB | LB | LB |
| 62 pF | 620 | F G J K M | | | | DG | DG | DG | ES | ES | ES | ES | ES | FM | FM | FM | FM | FM | LB | LB | LB | LB | LB | LB | LB |
| 68 pF | 680 | F G J K M | | | | DG | DG | DG | ES | ES | ES | ES | ES | FM | FM | FM | FM | FM | LB | LB | LB | LB | LB | LB | LB |
| 75 pF | 750 | F G J K M | | | | DG | DG | DG | ES | ES | ES | ES | EF | FM | FM | FM | FM | FM | LB | LB | LB | LB | LB | LB | LB |
| 82 pF | 820 | F G J K M | | | | DG | DG | DG | ES | ES | ES | ES | EF | FM | FM | FM | FM | FM | LB | LB | LB | LB | LB | LB | LB |
| 91 pF | 910 | F G J K M | | | | DG | DG | DG | ES | ES | ES | ES | EF | FM | FM | FM | FM | FM | LB | LB | LB | LB | LB | LB | LB |
| 100 pF | 101 | F G J K M | CJ | CJ | CJ | DG | DG | DG | ES | ES | ES | ES | EF | FM | FM | FM | FM | FM | LB | LB | LB | LB | LB | LC | LB |
| 110 pF | 111 | F G J K M | CJ | CJ | CJ | DG | DG | DG | ES | ES | ES | ES | EU | FM | FM | FM | FM | FM | LB | LB | LB | LB | LB | LC | LB |
| 120 pF | 121 | F G J K M | CJ | CJ | CJ | DG | DG | DG | ES | ES | ES | ES | EU | FZ | FZ | FZ | FM | FM | LA | LA | LA | LA | LB | LC | LB |
| 130 pF | 131 | F G J K M | CJ | CJ | CJ | DG | DG | DG | ES | ES | ES | ES | EU | FZ | FZ | FZ | FM | FM | LA | LA | LA | LA | LB | LC | LC |
| 150 pF | 151 | F G J K M | CJ | CJ | CJ | DG | DG | DG | ES | ES | ES | EF | EU | FZ | FZ | FZ | FM | FM | LA | LA | LA | LA | LB | LC | LC |
| 160 pF | 161 | F G J K M | CJ | CJ | CJ | DG | DG | DG | ES | ES | ES | EF | EU | FZ | FZ | FZ | FM | FM | LA | LA | LA | LA | LC | LC | LC |
| 180 pF | 181 | F G J K M | CJ | CJ | CJ | DG | DG | DG | ES | ES | ES | EF | EU | FZ | FZ | FZ | FM | FM | LA | LA | LA | LA | LC | LC | LC |
| 200 pF | 201 | F G J K M | CJ | CJ | CJ | DG | DG | DG | ES | ES | ES | EF | EU | FZ | FZ | FZ | FM | FM | LA | LA | LA | LA | LC | LC | |
| 220 pF | 221 | F G J K M | CJ | CJ | CJ | DG | DG | DG | ES | ES | ES | EU | EU | FZ | FZ | FZ | FM | FM | LA | LA | LA | LA | LC | LC | |
| 240 pF | 241 | F G J K M | CJ | CJ | | DG | DG | DG | ES | ES | ES | EU | EU | FZ | FZ | FZ | FM | FM | LA | LA | LA | LB | LC | LC | |
| 270 pF | 271 | F G J K M | CJ | CJ | | DG | DG | DG | ES | ES | ES | EU | EU | FZ | FZ | FZ | FK | FK | LA | LA | LA | LB | LC | LC | |
| 300 pF | 301 | F G J K M | CJ | CJ | | DG | DG | DC | ES | ES | EF | EU | | FZ | FZ | FZ | FK | FK | LA | LA | LA | LB | LC | LC | |
| 330 pF | 331 | F G J K M | CJ | CJ | | DG | DG | DC | ES | ES | EF | EU | | FZ | FZ | FZ | FK | FK | LA | LA | LA | LB | LC | LC | |
| 360 pF | 361 | F G J K M | CJ | CJ | | DG | DG | DC | ES | ES | EF | EU | | FZ | FZ | FZ | FK | FS | LA | LA | LA | LB | LA | LC | |
| 390 pF | 391 | F G J K M | CJ | CJ | | DG | DG | DC | ES | ES | EF | EU | | FZ | FZ | FZ | FK | FS | LA | LA | LA | LB | LA | LC | |
| 430 pF | 431 | F G J K M | CJ | CJ | | DG | DG | DD | ES | ES | EF | EU | | FZ | FM | FM | FS | FS | LA | LB | LB | LC | LA | | |
| 470 pF | 471 | F G J K M | CJ | CJ | | DG | DG | DD | ES | ES | EU | EU | | FZ | FM | FM | FS | FS | LA | LB | LB | LC | LA | | |
| 510 pF | 511 | F G J K M | CJ | CJ | | DG | DG | DD | ES | ES | EU | EU | | FZ | FM | FM | FS | FS | LA | LB | LB | LC | LB | | |
| 560 pF | 561 | F G J K M | CJ | CJ | | DG | DG | DG | ES | ES | EU | EU | | FZ | FM | FM | FS | FS | LA | LB | LB | LC | LB | | |
| 620 pF | 621 | F G J K M | CJ | CJ | | DG | DG | DG | ES | ES | EU | | | FZ | FM | FM | FS | FS | LA | LB | LB | LA | LC | | |
| 680 pF | 681 | F G J K M | CJ | CJ | | DG | DG | DG | ES | ES | EU | | | FZ | FM | FM | FS | FS | LB | LB | LB | LA | LC | | |
| 750 pF | 751 | F G J K M | | | | DG | DG | DG | ES | EF | EU | | | FZ | FM | FM | FM | | LB | LB | LB | LA | | | |
| 820 pF | 821 | F G J K M | | | | DG | DG | DG | ES | EF | EU | | | FZ | FM | FM | FM | | LB | LB | LB | LA | | | |
| 910 pF | 911 | F G J K M | | | | DC | DC | | ES | EF | EU | | | FM | FM | FM | FY | | LB | LB | LB | LA | | | |
| 1,000 pF | 102 | F G J K M | | | | DC | DC | | ES | EF | EU | | | FM | FM | FM | FY | | LB | LB | LB | LB | | | |
| Capacitance | Cap Code | Rated Voltage (VDC) | 500 | 630 | 1000 | 500 | 630 | 1000 | 500 | 630 | 1000 | 1500 | 2000 | 500 | 630 | 1000 | 1500 | 2000 | 500 | 630 | 1000 | 1500 | 2000 | 2500 | 3000 |
| | | Voltage Code | C | B | D | C | B | D | C | B | D | F | G | C | B | D | F | G | C | B | D | F | G | Z | H |
| | | Case Size/Series | C0603X | | | C0805X | | | C1206X | | | | | C1210X | | | | | C1808X | | | | | | |

**Capacitance range Includes E24 decade values only. (i.e., 10, 11, 12, 13, 15, 16, 18, 20, 22, 24, 27, 30, 33, 36, 39, 43, 47, 51, 56, 62, 68, 75, 82, and 91)*
*KEMET reserves the right to substitute product with an improved temperature characteristic, tighter capacitance tolerance and/or higher voltage capability within the same form factor (configuration and dimensions).*
*These products are protected under US Patents 7,172,985 and 7,670,981, other patents pending, and any foreign counterparts.*

## Table 1A – Capacitance Range/Selection Waterfall (0603 – 1808 Case Sizes) cont.

| Capacitance | Cap Code | Case Size/Series | C0603X | | | C0805X | | | C1206X | | | | | C1210X | | | | | C1808X | | | | | | |
|---|---|---|---|---|---|---|---|---|---|---|---|---|---|---|---|---|---|---|---|---|---|---|---|---|---|
| | | Voltage Code | C | B | D | C | B | D | C | B | D | F | G | C | B | D | F | G | C | B | D | F | G | Z | H |
| | | Rated Voltage (VDC) | 500 | 630 | 1000 | 500 | 630 | 1000 | 500 | 630 | 1000 | 1500 | 2000 | 500 | 630 | 1000 | 1500 | 2000 | 500 | 630 | 1000 | 1500 | 2000 | 2500 | 3000 |
| | | Capacitance Tolerance | Product Availability and Chip Thickness Codes See Table 2 for Chip Thickness Dimensions | | | | | | | | | | | | | | | | | | | | | | |
| 1,100 pF | 112 | F G J K M | | | | DC | DC | | EF | EU | ED | | | FM | FK | FK | FS | | LC | LC | LC | LB | | | |
| 1,200 pF | 122 | F G J K M | | | | DC | DC | | EF | EU | ED | | | FM | FK | FK | FS | | LC | LC | LC | LC | | | |
| 1,300 pF | 132 | F G J K M | | | | DC | DC | | EF | EU | ED | | | FM | FS | FS | | | LC | LC | LC | LC | | | |
| 1,500 pF | 152 | F G J K M | | | | DD | DD | | EF | EU | ED | | | FK | FS | FS | | | LC | LC | LC | LC | | | |
| 1,600 pF | 162 | F G J K M | | | | DD | DD | | EF | EU | ED | | | FK | FS | FS | | | LC | LC | LC | | | | |
| 1,800 pF | 182 | F G J K M | | | | DG | DG | | EF | EU | EF | | | FK | FS | FS | | | LC | LC | LC | | | | |
| 2,000 pF | 202 | F G J K M | | | | DG | DG | | EU | EQ | EF | | | FK | FL | FS | | | LC | LA | LB | | | | |
| 2,200 pF | 222 | F G J K M | | | | DG | DG | | EU | EQ | EF | | | FK | FL | FS | | | LC | LA | LB | | | | |
| 2,400 pF | 242 | F G J K M | | | | DG | DG | | EU | EQ | EU | | | FS | FL | FS | | | LC | LA | LB | | | | |
| 2,700 pF | 272 | F G J K M | | | | DG | DG | | EU | EQ | EU | | | FS | FL | FS | | | LC | LA | LC | | | | |
| 3,000 pF | 302 | F G J K M | | | | | | | EQ | EQ | | | | FS | FL | FF | | | LA | LA | LA | | | | |
| 3,300 pF | 332 | F G J K M | | | | | | | EQ | EQ | | | | FS | FM | FG | | | LA | LA | LA | | | | |
| 3,600 pF | 362 | F G J K M | | | | | | | ER | ER | | | | FL | FM | FG | | | LA | LB | LA | | | | |
| 3,900 pF | 392 | F G J K M | | | | | | | ER | ER | | | | FL | FY | FL | | | LA | LB | LA | | | | |
| 4,300 pF | 432 | F G J K M | | | | | | | ES | ES | | | | FM | FY | FL | | | LA | LC | LA | | | | |
| 4,700 pF | 472 | F G J K M | | | | | | | ES | ES | | | | FM | FY | FM | | | LA | LC | LB | | | | |
| 5,100 pF | 512 | F G J K M | | | | | | | EE | EE | | | | FY | FS | FM | | | LA | LB | LB | | | | |
| 5,200 pF | 562 | F G J K M | | | | | | | EF | EF | | | | FY | FS | FM | | | LB | LC | LC | | | | |
| 6,200pF | 622 | F G J K M | | | | | | | EF | EF | | | | FY | FE | FY | | | LC | LC | LC | | | | |
| 6,800pF | 682 | F G J K M | | | | | | | EU | EU | | | | FY | FE | FY | | | LC | LC | LC | | | | |
| 7,500pF | 752 | F G J K M | | | | | | | EU | EU | | | | FS | FF | FS | | | LA | LA | | | | | |
| 8,200pF | 822 | F G J K M | | | | | | | EU | EU | | | | FS | FF | FS | | | LA | LA | | | | | |
| 9,100 pF | 912 | F G J K M | | | | | | | EU | EU | | | | FF | FF | FS | | | LA | LA | | | | | |
| 10,000 pF | 103 | F G J K M | | | | | | | EU | EU | | | | FG | FG | FS | | | LA | LA | | | | | |
| 12,000 pF | 123 | F G J K M | | | | | | | EU | | | | | FG | FG | FM | | | LA | LA | | | | | |
| 15,000 pF | 153 | F G J K M | | | | | | | EU | | | | | FM | FM | FS | | | LB | LB | | | | | |
| 18,000 pF | 183 | F G J K M | | | | | | | | | | | | FM | FM | FS | | | LC | LC | | | | | |
| 22,000 pF | 223 | F G J K M | | | | | | | | | | | | FY | FY | FS | | | | | | | | | |
| 27,000 pF | 273 | F G J K M | | | | | | | | | | | | FS | FS | | | | | | | | | | |
| 33,000 pF | 333 | F G J K M | | | | | | | | | | | | FS | FS | | | | | | | | | | |
| Capacitance | Cap Code | Rated Voltage (VDC) | 500 | 630 | 1000 | 500 | 630 | 1000 | 500 | 630 | 1000 | 1500 | 2000 | 500 | 630 | 1000 | 1500 | 2000 | 500 | 630 | 1000 | 1500 | 2000 | 2500 | 3000 |
| | | Voltage Code | C | B | D | C | B | D | C | B | D | F | G | C | B | D | F | G | C | B | D | F | G | Z | H |
| | | Case Size/Series | C0603X | | | C0805X | | | C1206X | | | | | C1210X | | | | | C1808X | | | | | | |

**Capacitance range Includes E24 decade values only. (i.e., 10, 11, 12, 13, 15, 16, 18, 20, 22, 24, 27, 30, 33, 36, 39, 43, 47, 51, 56, 62, 68, 75, 82, and 91)*
*KEMET reserves the right to substitute product with an improved temperature characteristic, tighter capacitance tolerance and/or higher voltage capability within the same form factor (configuration and dimensions).*
*These products are protected under US Patents 7,172,985 and 7,670,981, other patents pending, and any foreign counterparts.*

## Table 1B – Capacitance Range/Selection Waterfall (1812 – 2225 Case Sizes)

| Cap | Cap Code | Case Size/ Series | | | | | C1812X | | | | | | | C1825X | | | | | | | C2220X | | | | | | | C2225X | | | | | | | |
|---|---|---|---|---|---|---|---|---|---|---|---|---|---|---|---|---|---|---|---|---|---|---|---|---|---|---|---|---|---|---|---|---|---|---|---|
| | | Voltage Code | | | | | C | B | D | F | G | Z | H | C | B | D | F | G | Z | H | C | B | D | F | G | Z | H | C | B | D | F | G | Z | H | K |
| | | Rated Voltage (VDC) | | | | | 500 | 630 | 1000 | 1500 | 2000 | 2500 | 3000 | 500 | 630 | 1000 | 1500 | 2000 | 2500 | 3000 | 500 | 630 | 1000 | 1500 | 2000 | 2500 | 3000 | 500 | 630 | 1000 | 1500 | 2000 | 2500 | 3000 | 10000 |
| | | Capacitance Tolerance | | | | | Product Availability and Chip Thickness Codes See Table 2 for Chip Thickness Dimensions | | | | | | | | | | | | | | | | | | | | | | | | | | | | |
| 10 pF | 100 | F | G | J | K | M | GB | GB | GB | GB | GB | GB | GB | | | | | | | | JK | JK | JK | JK | JK | JK | JK | KF | KF | KF | KF | KF | KF | KF | |
| 11 pF | 110 | F | G | J | K | M | GB | GB | GB | GB | GB | GB | GB | | | | | | | | JK | JK | JK | JK | JK | JK | JK | KF | KF | KF | KF | KF | KF | KF | |
| 12 pF | 120 | F | G | J | K | M | GB | GB | GB | GB | GB | GB | GB | | | | | | | | JK | JK | JK | JK | JK | JK | JK | KF | KF | KF | KF | KF | KF | KF | |
| 13 pF | 130 | F | G | J | K | M | GB | GB | GB | GB | GB | GB | GB | | | | | | | | JK | JK | JK | JK | JK | JK | JK | KF | KF | KF | KF | KF | KF | KF | |
| 15 pF | 150 | F | G | J | K | M | GB | GB | GB | GB | GB | GB | GB | | | | | | | | JK | JK | JK | JK | JK | JK | JK | KF | KF | KF | KF | KF | KF | KF | |
| 16 pF | 160 | F | G | J | K | M | GB | GB | GB | GB | GB | GB | GB | | | | | | | | JK | JK | JK | JK | JK | JK | JK | KF | KF | KF | KF | KF | KF | KF | |
| 18 pF | 180 | F | G | J | K | M | GB | GB | GB | GB | GB | GB | GB | | | | | | | | JK | JK | JK | JK | JK | JK | JK | KF | KF | KF | KF | KF | KF | KF | |
| 20 pF | 200 | F | G | J | K | M | GB | GB | GB | GB | GB | GB | GB | | | | | | | | JK | JK | JK | JK | JK | JK | JK | KF | KF | KF | KF | KF | KF | KF | |
| 22 pF | 220 | F | G | J | K | M | GB | GB | GB | GB | GB | GB | GB | | | | | | | | JK | JK | JK | JK | JK | JK | JK | KF | KF | KF | KF | KF | KF | KF | |
| 24 pF | 240 | F | G | J | K | M | GB | GB | GB | GB | GB | GB | GB | | | | | | | | JK | JK | JK | JK | JK | JK | JK | KF | KF | KF | KF | KF | KF | KF | |
| 27 pF | 270 | F | G | J | K | M | GB | GB | GB | GB | GB | GB | GB | | | | | | | | JK | JK | JK | JK | JK | JK | JK | KF | KF | KF | KF | KF | KF | KF | |
| 30 pF | 300 | F | G | J | K | M | GB | GB | GB | GB | GB | GB | GB | | | | | | | | JK | JK | JK | JK | JK | JK | JK | KF | KF | KF | KF | KF | KF | KF | |
| 33 pF | 330 | F | G | J | K | M | GB | GB | GB | GB | GB | GB | GB | | | | | | | | JK | JK | JK | JK | JK | JK | JK | KF | KF | KF | KF | KF | KF | KF | |
| 36 pF | 360 | F | G | J | K | M | GB | GB | GB | GB | GB | GB | GB | | | | | | | | JK | JK | JK | JK | JK | JK | JK | KF | KF | KF | KF | KF | KF | KF | |
| 39 pF | 390 | F | G | J | K | M | GB | GB | GB | GB | GB | GB | GB | | | | | | | | JK | JK | JK | JK | JK | JK | JK | KF | KF | KF | KF | KF | KF | KF | |
| 43 pF | 430 | F | G | J | K | M | GB | GB | GB | GB | GB | GB | GB | | | | | | | | JK | JK | JK | JK | JK | JK | JK | KF | KF | KF | KF | KF | KF | KF | |
| 47 pF | 470 | F | G | J | K | M | GB | GB | GB | GB | GB | GB | GB | | | | | | | | JK | JK | JK | JK | JK | JK | JK | KF | KF | KF | KF | KF | KF | KF | KE |
| 51 pF | 510 | F | G | J | K | M | GB | GB | GB | GB | GB | GB | GB | | | | | | | | JK | JK | JK | JK | JK | JK | JK | KF | KF | KF | KF | KF | KF | KF | KE |
| 56 pF | 560 | F | G | J | K | M | GB | GB | GB | GB | GB | GB | GB | | | | | | | | JK | JK | JK | JK | JK | JK | JK | KF | KF | KF | KF | KF | KF | KF | KE |
| 62 pF | 620 | F | G | J | K | M | GB | GB | GB | GB | GB | GB | GB | | | | | | | | JK | JK | JK | JK | JK | JK | JK | KF | KF | KF | KF | KF | KF | KF | KF |
| 68 pF | 680 | F | G | J | K | M | GB | GB | GB | GB | GB | GB | GB | | | | | | | | JK | JK | JK | JK | JK | JK | JK | KF | KF | KF | KF | KF | KF | KF | KF |
| 75 pF | 750 | F | G | J | K | M | GB | GB | GB | GB | GB | GB | GB | | | | | | | | JK | JK | JK | JK | JK | JK | JK | KF | KF | KF | KF | KF | KF | KF | KF |
| 82 pF | 820 | F | G | J | K | M | GB | GB | GB | GB | GB | GB | GB | | | | | | | | JK | JK | JK | JK | JK | JK | JK | KF | KF | KF | KF | KF | KF | KF | KF |
| 91 pF | 910 | F | G | J | K | M | GD | GD | GD | GD | GD | GD | GD | | | | | | | | JK | JK | JK | JK | JK | JK | JK | KF | KF | KF | KF | KF | KF | KF | KH |
| 100 pF | 101 | F | G | J | K | M | GD | GD | GD | GD | GD | GD | GD | | | | | | | | JK | JK | JK | JK | JK | JK | JK | KF | KF | KF | KF | KF | KF | KF | KH |
| 110 pF | 111 | F | G | J | K | M | GD | GD | GD | GD | GD | GD | GD | | | | | | | | JK | JK | JK | JK | JK | JK | JK | KF | KF | KF | KF | KF | KF | KF | KJ |
| 120 pF | 121 | F | G | J | K | M | GD | GD | GD | GD | GD | GD | GD | | | | | | | | JK | JK | JK | JK | JK | JK | JK | KF | KF | KF | KF | KF | KF | KF | KJ |
| 130 pF | 131 | F | G | J | K | M | GD | GD | GD | GD | GD | GD | GD | | | | | | | | JK | JK | JK | JK | JK | JK | JK | KF | KF | KF | KF | KF | KF | KF | KJ |
| 150 pF | 151 | F | G | J | K | M | GD | GD | GD | GD | GD | GD | GK | | | | | | | | JK | JK | JK | JK | JK | JK | JK | KF | KF | KF | KF | KF | KF | KF | |
| 160 pF | 161 | F | G | J | K | M | GD | GD | GD | GD | GD | GD | GK | | | | | | | | JK | JK | JK | JK | JK | JK | JK | KF | KF | KF | KF | KF | KF | KF | |
| 180 pF | 181 | F | G | J | K | M | GD | GD | GD | GD | GD | GD | GK | | | | | | | | JK | JK | JK | JK | JK | JK | JK | KF | KF | KF | KF | KF | KF | KF | |
| 200 pF | 201 | F | G | J | K | M | GD | GD | GD | GD | GD | GD | GM | | | | | | | | JK | JK | JK | JK | JK | JK | JK | KF | KF | KF | KF | KF | KF | KF | |
| 220 pF | 221 | F | G | J | K | M | GB | GB | GB | GB | GB | GD | GM | | | | | | | | JK | JK | JK | JK | JK | JK | JK | KF | KF | KF | KF | KF | KF | KF | |
| 240 pF | 241 | F | G | J | K | M | GB | GB | GB | GB | GB | GD | GM | | | | | | | | JK | JK | JK | JK | JK | JK | JK | KE | KE | KE | KE | KE | KE | KF | |
| 270 pF | 271 | F | G | J | K | M | GB | GB | GB | GB | GB | GH | GM | | | | | | | | JK | JK | JK | JK | JK | JK | JK | KE | KE | KE | KE | KE | KE | KF | |
| 300 pF | 301 | F | G | J | K | M | GB | GB | GB | GB | GB | GH | GM | | | | | | | | JK | JK | JK | JK | JK | JK | JK | KE | KE | KE | KE | KE | KE | KF | |
| 330 pF | 331 | F | G | J | K | M | GB | GB | GB | GB | GB | GH | GO | | | | | | | | JE | JE | JE | JE | JE | JK | JK | KE | KE | KE | KE | KE | KE | KF | |
| 360 pF | 361 | F | G | J | K | M | GB | GB | GB | GB | GD | GK | GO | | | | | | | | JE | JE | JE | JE | JE | JK | JK | KE | KE | KE | KE | KE | KE | KF | |
| 390 pF | 391 | F | G | J | K | M | GB | GB | GB | GB | GD | GK | GO | | | | | | | | JE | JE | JE | JE | JE | JK | JK | KE | KE | KE | KE | KE | KE | KF | |
| 430 pF | 431 | F | G | J | K | M | GB | GB | GB | GB | GD | GK | | | | | | | | HJ | JE | JE | JE | JE | JE | JK | JE | KE | KE | KE | KE | KE | KE | KF | |
| 470 pF | 471 | F | G | J | K | M | GB | GB | GB | GB | GD | GK | | | | | | | | HJ | JE | JE | JE | JE | JE | JK | JK | KF | KF | KF | KF | KE | KE | KF | |
| 510 pF | 511 | F | G | J | K | M | GB | GB | GB | GD | GH | GM | | | | | | | | HJ | JK | JK | JK | JK | JK | JK | JK | KF | KF | KF | KF | KE | KE | KF | |
| 560 pF | 561 | F | G | J | K | M | GB | GB | GB | GD | GD | GH | GM | | | | | | | HJ | JK | JK | JK | JK | JK | JK | JL | KF | KF | KF | KF | KE | KE | KF | |
| 620 pF | 621 | F | G | J | K | M | GB | GB | GB | GD | GD | GH | GM | | | | | | | HK | JK | JK | JK | JK | JK | JK | JL | KF | KF | KF | KF | KE | KE | KF | KH |
| 680 pF | 681 | F | G | J | K | M | GB | GB | GB | GD | GD | GH | GO | | | | | | | HK | JE | JE | JE | JK | JK | JK | JL | KF | KF | KF | KF | KE | KE | KF | KH |
| 750 pF | 751 | F | G | J | K | M | GB | GB | GB | GD | GD | GK | | | | | | | | | JE | JE | JE | JK | JK | JK | JL | KE | KE | KE | KF | KE | KE | KF | KH |
| 820 pF | 821 | F | G | J | K | M | GB | GB | GB | GD | GD | GK | | | | | | | | | JE | JE | JE | JK | JK | JK | JN | KE | KE | KE | KF | KE | KE | KF | KJ |
| 910 pF | 911 | F | G | J | K | M | GB | GB | GB | GH | GH | GM | | | | | | | | | JE | JK | JK | JK | JK | JK | JN | KE | KE | KE | KF | KE | KE | KF | KJ |
| 1,000 pF | 102 | F | G | J | K | M | GB | GB | GB | GH | GH | GM | | | | | | | | | JE | JK | JK | JK | JK | JK | JN | KE | KE | KE | KF | KE | KE | KF | KJ |
| 1,100 pF | 112 | F | G | J | K | M | GB | GB | GB | GH | GH | GO | | | | | | | HJ | | JE | JK | JK | JK | JK | JK | | KE | KE | KE | KE | KF | KF | KF | |
| Cap | Cap Code | Rated Voltage (VDC) | | | | | 500 | 630 | 1000 | 1500 | 2000 | 2500 | 3000 | 500 | 630 | 1000 | 1500 | 2000 | 2500 | 3000 | 500 | 630 | 1000 | 1500 | 2000 | 2500 | 3000 | 500 | 630 | 1000 | 1500 | 2000 | 2500 | 3000 | 10000 |
| | | Voltage Code | | | | | C | B | D | F | G | Z | H | C | B | D | F | G | Z | H | C | B | D | F | G | Z | H | C | B | D | F | G | Z | H | K |
| | | Case Size/Series | | | | | C1812X | | | | | | | C1825X | | | | | | | C2220X | | | | | | | C2225X | | | | | | | |

**Capacitance range Includes E24 decade values only. (i.e., 10, 11, 12, 13, 15, 16, 18, 20, 22, 24, 27, 30, 33, 36, 39, 43, 47, 51, 56, 62, 68, 75, 82, and 91)*
*KEMET reserves the right to substitute product with an improved temperature characteristic, tighter capacitance tolerance and/or higher voltage capability within the same form factor (configuration and dimensions).*
*These products are protected under US Patents 7,172,985 and 7,670,981, other patents pending, and any foreign counterparts.*

## Table 1B – Capacitance Range/Selection Waterfall (1812 – 2225 Case Sizes) cont.

| Cap | Cap Code | Case Size/ Series | | | | | C1812X | | | | | | | C1825X | | | | | | | C2220X | | | | | | | C2225X | | | | | | | |
|---|---|---|---|---|---|---|---|---|---|---|---|---|---|---|---|---|---|---|---|---|---|---|---|---|---|---|---|---|---|---|---|---|---|---|---|
| | | Voltage Code | | | | | C | B | D | F | G | Z | H | C | B | D | F | G | Z | H | C | B | D | F | G | Z | H | C | B | D | F | G | Z | H | K |
| | | Rated Voltage (VDC) | | | | | 500 | 630 | 1000 | 1500 | 2000 | 2500 | 3000 | 500 | 630 | 1000 | 1500 | 2000 | 2500 | 3000 | 500 | 630 | 1000 | 1500 | 2000 | 2500 | 3000 | 500 | 630 | 1000 | 1500 | 2000 | 2500 | 3000 | 10000 |
| | | Capacitance Tolerance | | | | | Product Availability and Chip Thickness Codes See Table 2 for Chip Thickness Dimensions | | | | | | | | | | | | | | | | | | | | | | | | | | | | |
| 1,200 pF | 122 | F | G | J | K | M | GB | GB | GB | GH | GO | | | | | | | | HJ | | JE | JK | JK | JK | JK | JL | | KE | KE | KE | KF | KF | KF | | |
| 1,300 pF | 132 | F | G | J | K | M | GB | GB | GB | GH | GO | | | | | | | HE | HJ | | JE | JK | JK | JK | JE | JL | | KE | KE | KE | KF | KF | KH | | |
| 1,500 pF | 152 | F | G | J | K | M | GB | GB | GB | GK | GO | | | | | | | HE | HK | | JE | JK | JK | JK | JE | JL | | KE | KE | KE | KF | KF | KH | | |
| 1,600 pF | 162 | F | G | J | K | M | GB | GD | GD | GK | | | | | | | | HG | HK | | JE | JK | JK | JK | JE | JL | | KE | KE | KE | KF | KE | KH | | |
| 1,800 pF | 182 | F | G | J | K | M | GB | GD | GD | GM | | | | | | | | HG | | | JE | JK | JK | JK | JE | JN | | KE | KE | KE | KF | KE | KH | | |
| 2,000 pF | 202 | F | G | J | K | M | GB | GH | GH | GM | | | | | | | HE | HJ | | | JE | JK | JK | JE | JK | | | KE | KE | KE | KF | KE | KJ | | |
| 2,200 pF | 222 | F | G | J | K | M | GB | GH | GH | GO | | | | | | | HE | HJ | | | JE | JK | JK | JE | JK | | | KE | KE | KE | KF | KF | KJ | | |
| 2,400 pF | 242 | F | G | J | K | M | GB | GH | GK | GO | | | | | | | HE | HJ | | | JK | JK | JK | JE | JL | | | KE | KE | KE | KE | KH | | | |
| 2,700 pF | 272 | F | G | J | K | M | GB | GH | GK | GO | | | | | | | HE | HK | | | JK | JK | JK | JE | JL | | | KE | KE | KE | KE | KH | | | |
| 3,000 pF | 302 | F | G | J | K | M | GB | GH | GK | | | | | | | | HE | HK | | | JK | JK | JK | JE | JL | | | KE | KE | KE | KE | KH | | | |
| 3,300 pF | 332 | F | G | J | K | M | GB | GH | GK | | | | | | | | HG | | | | JK | JK | JK | JK | JN | | | KE | KE | KE | KE | KJ | | | |
| 3,600 pF | 362 | F | G | J | K | M | GB | GH | GM | | | | | | | | HG | | | | JK | JK | JK | JK | JN | | | KE | KF | KF | KF | KJ | | | |
| 3,900 pF | 392 | F | G | J | K | M | GB | GH | GM | | | | | | | | HJ | | | | JK | JK | JK | JK | JN | | | KE | KF | KF | KF | KJ | | | |
| 4,300 pF | 432 | F | G | J | K | M | GH | GH | GO | | | | | | | | HJ | | | | JK | JK | JK | JK | | | | KE | KF | KF | KF | | | | |
| 4,700 pF | 472 | F | G | J | K | M | GH | GH | GO | | | | | | | | HJ | | | | JK | JK | JK | JL | | | | KE | KF | KF | KH | | | | |
| 5,100 pF | 512 | F | G | J | K | M | GH | GK | GO | | | | | | HE | HG | HK | | | | JK | JK | JK | JL | | | | KE | KF | KF | KH | | | | |
| 5,600 pF | 562 | F | G | J | K | M | GH | GK | GO | | | | | | HE | HG | HK | | | | JK | JK | JK | JN | | | | KE | KF | KF | KH | | | | |
| 6,200 pF | 622 | F | G | J | K | M | GH | GK | GH | | | | | | HE | HG | | | | | JK | JE | JE | JN | | | | KE | KF | KF | KJ | | | | |
| 6,800 pF | 682 | F | G | J | K | M | GH | GM | GH | | | | | | HE | HJ | | | | | JK | JE | JK | JN | | | | KE | KF | KF | KJ | | | | |
| 7,500 pF | 752 | F | G | J | K | M | GH | GM | GK | | | | | | HE | HJ | | | | | JK | JE | JK | | | | | KF | KE | KF | | | | | |
| 8,200 pF | 822 | F | G | J | K | M | GK | GO | GK | | | | | | HE | HJ | | | | | JK | JE | JL | | | | | KF | KE | KF | | | | | |
| 9,100 pF | 912 | F | G | J | K | M | GM | GO | GM | | | | | HE | HG | HK | | | | | JE | JE | JL | | | | | KF | KE | KH | | | | | |
| 10,000 pF | 103 | F | G | J | K | M | GM | GO | GM | | | | | HE | HG | HK | | | | | JE | JE | JL | | | | | KF | KE | KH | | | | | |
| 12,000 pF | 123 | F | G | J | K | M | GO | GH | GO | | | | | HE | HG | HE | | | | | JE | JK | JN | | | | | KE | KE | KH | | | | | |
| 15,000 pF | 153 | F | G | J | K | M | GO | GH | GO | | | | | HE | HJ | HE | | | | | JE | JL | JE | | | | | KE | KF | KJ | | | | | |
| 18,000 pF | 183 | F | G | J | K | M | GH | GH | | | | | | HG | HK | HG | | | | | JE | JL | JE | | | | | KE | KH | KE | | | | | |
| 22,000 pF | 223 | F | G | J | K | M | GH | GH | | | | | | HJ | HE | HJ | | | | | JK | JN | JK | | | | | KF | KJ | KF | | | | | |
| 27,000 pF | 273 | F | G | J | K | M | GK | GK | | | | | | HJ | HE | HK | | | | | JL | JN | JL | | | | | KF | KJ | KH | | | | | |
| 33,000 pF | 333 | F | G | J | K | M | GM | GM | | | | | | HK | HE | HK | | | | | JN | JE | JN | | | | | KH | KE | KH | | | | | |
| 39,000 pF | 393 | F | G | J | K | M | GO | GO | | | | | | HE | HE | | | | | | JE | JE | | | | | | KJ | KE | KJ | | | | | |
| 47,000 pF | 473 | F | G | J | K | M | GO | GO | | | | | | HE | HE | | | | | | JE | JE | | | | | | KE | KE | | | | | | |
| 56,000 pF | 563 | F | G | J | K | M | | | | | | | | HG | HG | | | | | | JK | JK | | | | | | KE | KE | | | | | | |
| 68,000 pF | 683 | F | G | J | K | M | | | | | | | | HJ | HJ | | | | | | JL | JL | | | | | | KF | KF | | | | | | |
| 82,000 pF | 823 | F | G | J | K | M | | | | | | | | HK | HK | | | | | | JL | JL | | | | | | KH | KH | | | | | | |
| 0.1 µF | 104 | F | G | J | K | M | | | | | | | | HK | HK | | | | | | JN | JN | | | | | | KH | KH | | | | | | |
| 0.12 µF | 124 | F | G | J | K | M | | | | | | | | | | | | | | | | | | | | | | KJ | KJ | | | | | | |
| Cap | Cap Code | Rated Voltage (VDC) | | | | | 500 | 630 | 1000 | 1500 | 2000 | 2500 | 3000 | 500 | 630 | 1000 | 1500 | 2000 | 2500 | 3000 | 500 | 630 | 1000 | 1500 | 2000 | 2500 | 3000 | 500 | 630 | 1000 | 1500 | 2000 | 2500 | 3000 | 10000 |
| | | Voltage Code | | | | | C | B | D | F | G | Z | H | C | B | D | F | G | Z | H | C | B | D | F | G | Z | H | C | B | D | F | G | Z | H | K |
| | | Case Size/Series | | | | | C1812X | | | | | | | C1825X | | | | | | | C2220X | | | | | | | C2225X | | | | | | | |

**Capacitance range Includes E24 decade values only. (i.e., 10, 11, 12, 13, 15, 16, 18, 20, 22, 24, 27, 30, 33, 36, 39, 43, 47, 51, 56, 62, 68, 75, 82, and 91)*
*KEMET reserves the right to substitute product with an improved temperature characteristic, tighter capacitance tolerance and/or higher voltage capability within the same form factor (configuration and dimensions).*
*These products are protected under US Patents 7,172,985 and 7,670,981, other patents pending, and any foreign counterparts.*

## Table 2A – Chip Thickness/Tape & Reel Packaging Quantities

| Thickness Code | Case Size | Thickness ± Range (mm) | Paper Quantity | | Plastic Quantity | |
|---|---|---|---|---|---|---|
| | | | 7" Reel | 13" Reel | 7" Reel | 13" Reel |
| CJ | 603 | 0.80 ± 0.15* | 4,000 | 15,000 | 0 | 0 |
| DC | 805 | 0.78 ± 0.10 | 0 | 0 | 4,000 | 10,000 |
| DD | 805 | 0.90 ± 0.10 | 0 | 0 | 4,000 | 10,000 |
| DG | 805 | 1.25 ± 0.15 | 0 | 0 | 2,500 | 10,000 |
| EQ | 1206 | 0.78 ± 0.20 | 0 | 0 | 4,000 | 10,000 |
| ER | 1206 | 0.90 ± 0.20 | 0 | 0 | 4,000 | 10,000 |
| ED | 1206 | 1.00 ± 0.10 | 0 | 0 | 2,500 | 10,000 |
| ES | 1206 | 1.00 ± 0.20 | 0 | 0 | 2,500 | 10,000 |
| EE | 1206 | 1.10 ± 0.10 | 0 | 0 | 2,500 | 10,000 |
| EF | 1206 | 1.20 ± 0.15 | 0 | 0 | 2,500 | 10,000 |
| EU | 1206 | 1.60 ± 0.25 | 0 | 0 | 2,000 | 8,000 |
| FZ | 1210 | 1.25 ± 0.20 | 0 | 0 | 2,500 | 10,000 |
| FM | 1210 | 1.70 ± 0.20 | 0 | 0 | 2,000 | 8,000 |
| FE | 1210 | 1.00 ± 0.10 | 0 | 0 | 2,500 | 10,000 |
| FF | 1210 | 1.10 ± 0.10 | 0 | 0 | 2,500 | 10,000 |
| FG | 1210 | 1.25 ± 0.15 | 0 | 0 | 2,500 | 10,000 |
| FL | 1210 | 1.40 ± 0.15 | 0 | 0 | 2,000 | 8,000 |
| FY | 1210 | 2.00 ± 0.20 | 0 | 0 | 2,000 | 8,000 |
| FK | 1210 | 2.10 ± 0.20 | 0 | 0 | 2,000 | 8,000 |
| FS | 1210 | 2.50 ± 0.30 | 0 | 0 | 1,000 | 4,000 |
| LA | 1808 | 1.40 ± 0.15 | 0 | 0 | 1,000 | 4,000 |
| LB | 1808 | 1.60 ± 0.15 | 0 | 0 | 1,000 | 4,000 |
| LC | 1808 | 2.00 ± 0.15 | 0 | 0 | 1,000 | 4,000 |
| GB | 1812 | 1.00 ± 0.10 | 0 | 0 | 1,000 | 4,000 |
| GD | 1812 | 1.25 ± 0.15 | 0 | 0 | 1,000 | 4,000 |
| GH | 1812 | 1.40 ± 0.15 | 0 | 0 | 1,000 | 4,000 |
| GK | 1812 | 1.60 ± 0.20 | 0 | 0 | 1,000 | 4,000 |
| GM | 1812 | 2.00 ± 0.20 | 0 | 0 | 500 | 2,000 |
| GO | 1812 | 2.50 ± 0.20 | 0 | 0 | 500 | 2,000 |
| HE | 1825 | 1.40 ± 0.15 | 0 | 0 | 1,000 | 4,000 |
| HG | 1825 | 1.60 ± 0.20 | 0 | 0 | 1,000 | 4,000 |
| HJ | 1825 | 2.00 ± 0.20 | 0 | 0 | 500 | 2,000 |
| HK | 1825 | 2.50 ± 0.20 | 0 | 0 | 500 | 2,000 |
| JE | 2220 | 1.40 ± 0.15 | 0 | 0 | 1,000 | 4,000 |
| JK | 2220 | 1.60 ± 0.20 | 0 | 0 | 1,000 | 4,000 |
| JL | 2220 | 2.00 ± 0.20 | 0 | 0 | 500 | 2,000 |
| JN | 2220 | 2.50 ± 0.20 | 0 | 0 | 500 | 2,000 |
| KE | 2225 | 1.40 ± 0.15 | 0 | 0 | 1,000 | 4,000 |
| KF | 2225 | 1.60 ± 0.20 | 0 | 0 | 1,000 | 4,000 |
| KH | 2225 | 2.00 ± 0.20 | 0 | 0 | 500 | 2,000 |
| KJ | 2225 | 2.50 ± 0.20 | 0 | 0 | 500 | 2,000 |
| **Thickness Code** | **Case Size** | **Thickness ± Range (mm)** | **7" Reel** | **13" Reel** | **7" Reel** | **13" Reel** |
| | | | **Paper Quantity** | | **Plastic Quantity** | |

*Package quantity based on finished chip thickness specifications.*

## Table 2B – Bulk Packaging Quantities

| Packaging Type | | Loose Packaging | |
|---|---|---|---|
| | | Bulk Bag (default) | |
| Packaging C-Spec[1] | | N/A[2] | |
| Case Size | | Packaging Quantities (pieces/unit packaging) | |
| EIA (in) | Metric (mm) | Minimum | Maximum |
| 0603 | 1608 | 1 | 50,000 |
| 0805 | 2012 | | |
| 1206 | 3216 | | |
| 1210 | 3225 | | |
| 1808 | 4520 | | 20,000 |
| 1812 | 4532 | | |
| 1825 | 4564 | | |
| 2220 | 5650 | | |
| 2225 | 5664 | | |

[1] *The "Packaging C-Spec" is a 4 to 8 digit code which identifies the packaging type and/or product grade. When ordering, the proper code must be included in the 15th through 22nd character positions of the ordering code. See "Ordering Information" section of this document for further details. Commercial Grade product ordered without a packaging C-Spec will default to our standard "Bulk Bag" packaging. Contact KEMET if you require a bulk bag packaging option for Automotive Grade products.*

[2] *A packaging C-Spec (see note 1 above) is not required for "Bulk Bag" packaging (excluding Anti-Static Bulk Bag and Automotive Grade products). The 15th through 22nd character positions of the ordering code should be left blank. All product ordered without a packaging C-Spec will default to our standard "Bulk Bag" packaging.*

## Table 3 – Chip Capacitor Land Pattern Design Recommendations per IPC–7351

| EIA Size Code | Metric Size Code | Density Level A: Maximum (Most) Land Protrusion (mm) | | | | | Density Level B: Median (Nominal) Land Protrusion (mm) | | | | | Density Level C: Minimum (Least) Land Protrusion (mm) | | | | |
|---|---|---|---|---|---|---|---|---|---|---|---|---|---|---|---|---|
| | | C | Y | X | V1 | V2 | C | Y | X | V1 | V2 | C | Y | X | V1 | V2 |
| 0603 | 1608 | 0.90 | 1.15 | 1.10 | 4.00 | 2.10 | 0.80 | 0.95 | 1.00 | 3.10 | 1.50 | 0.60 | 0.75 | 0.90 | 2.40 | 1.20 |
| 0805 | 2012 | 0.99 | 1.44 | 1.66 | 4.47 | 2.71 | 0.89 | 1.24 | 1.56 | 3.57 | 2.11 | 0.79 | 1.04 | 1.46 | 2.42 | 1.81 |
| 1206 | 3216 | 1.59 | 1.62 | 2.06 | 5.85 | 3.06 | 1.49 | 1.42 | 1.96 | 4.95 | 2.46 | 1.39 | 1.22 | 1.86 | 4.25 | 2.16 |
| 1210 | 3225 | 1.59 | 1.62 | 3.01 | 5.90 | 4.01 | 1.49 | 1.42 | 2.91 | 4.95 | 3.41 | 1.39 | 1.22 | 2.81 | 4.25 | 3.11 |
| 1808 | 4520 | 2.30 | 1.75 | 2.30 | 7.40 | 3.30 | 2.20 | 1.55 | 2.20 | 6.50 | 2.70 | 2.10 | 1.35 | 2.10 | 5.80 | 2.40 |
| 1812 | 4532 | 2.10 | 1.80 | 3.60 | 7.00 | 4.60 | 2.00 | 1.60 | 3.50 | 6.10 | 4.00 | 1.90 | 1.40 | 3.40 | 5.40 | 3.70 |
| 1825 | 4564 | 2.15 | 1.80 | 6.90 | 7.10 | 7.90 | 2.05 | 1.60 | 6.80 | 6.20 | 7.30 | 1.95 | 1.40 | 6.70 | 5.50 | 7.00 |
| 2220 | 5650 | 2.85 | 2.10 | 5.50 | 8.80 | 6.50 | 2.75 | 1.90 | 5.40 | 7.90 | 5.90 | 2.65 | 1.70 | 5.30 | 7.20 | 5.60 |
| 2225 | 5664 | 2.85 | 2.10 | 6.90 | 8.80 | 7.90 | 2.75 | 1.90 | 6.80 | 7.90 | 7.30 | 2.65 | 1.70 | 6.70 | 7.20 | 7.00 |

***Density Level A:*** *For low-density product applications. Recommended for wave solder applications and provides a wider process window for reflow solder processes. KEMET only recommends wave soldering of EIA 0603, 0805 and 1206 case sizes.*
***Density Level B:*** *For products with a moderate level of component density. Provides a robust solder attachment condition for reflow solder processes.*
***Density Level C:*** *For high component density product applications. Before adapting the minimum land pattern variations the user should perform qualification testing based on the conditions outlined in IPC Standard 7351 (IPC–7351).*
*Image below based on Density Level B for an EIA 1210 case size.*

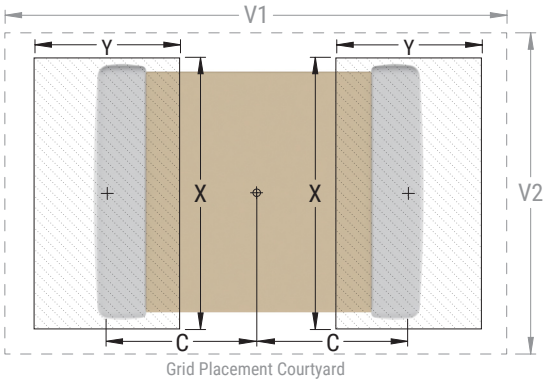

## Soldering Process

**Recommended Soldering Technique:**

- Solder wave or solder reflow for EIA case sizes 0603, 0805 and 1206
- All other EIA case sizes are limited to solder reflow only

**Recommended Reflow Soldering Profile:**

KEMET's families of surface mount multilayer ceramic capacitors (SMD MLCCs) are compatible with wave (single or dual), convection, IR or vapor phase reflow techniques. Preheating of these components is recommended to avoid extreme thermal stress. KEMET's recommended profile conditions for convection and IR reflow reflect the profile conditions of the IPC/J-STD-020 standard for moisture sensitivity testing. These devices can safely withstand a maximum of three reflow passes at these conditions.

| Profile Feature | Termination Finish | |
|---|---|---|
| | SnPb | 100% Matte Sn |
| **Preheat/Soak** | | |
| Temperature Minimum ($T_{Smin}$) | 100°C | 150°C |
| Temperature Maximum ($T_{Smax}$) | 150°C | 200°C |
| Time ($t_S$) from $T_{Smin}$ to $T_{Smax}$ | 60 – 120 seconds | 60 – 120 seconds |
| Ramp-Up Rate ($T_L$ to $T_P$) | 3°C/second maximum | 3°C/second maximum |
| Liquidous Temperature ($T_L$) | 183°C | 217°C |
| Time Above Liquidous ($t_L$) | 60 – 150 seconds | 60 – 150 seconds |
| Peak Temperature ($T_P$) | 235°C | 260°C |
| Time Within 5°C of Maximum Peak Temperature ($t_P$) | 20 seconds maximum | 30 seconds maximum |
| Ramp-Down Rate ($T_P$ to $T_L$) | 6°C/second maximum | 6°C/second maximum |
| Time 25°C to Peak Temperature | 6 minutes maximum | 8 minutes maximum |

*Note 1: All temperatures refer to the center of the package, measured on the capacitor body surface that is facing up during assembly reflow.*

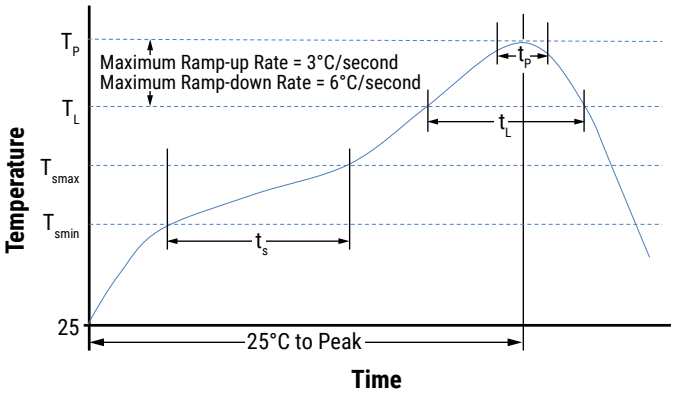

## Table 4 – Performance & Reliability: Test Methods and Conditions

| Stress | Reference | Test Condition | Limits |
|---|---|---|---|
| Visual and Mechanical | KEMET Internal | No defects that may affect performance (10X) | Dimensions according KEMET Spec Sheet |
| Capacitance (Cap) | KEMET Internal | C ≤ 1,000 pF<br>Frequency: 1 MHz ±100 kHz<br>Voltage*:1.0 $V_{rms}$ ±0.2 V<br>C > 1,000 pF<br>Frequency: 1 kHz ±50 Hz<br>Voltage: 1.0 $V_{rms}$ ±0.2 V<br><br>* See part number specification sheet for voltage | Within Tolerance |
| Dissipation Factor (DF) | KEMET Internal | C ≤ 1,000 pF<br>Frequency: 1 MHz ±100 kHz<br>Voltage*:1.0 $V_{rms}$ ±0.2 V<br>C > 1,000 pF<br>Frequency: 1 kHz ±50 Hz<br>Voltage: 1.0 $V_{rms}$ ±0.2 V<br><br>* See part number specification sheet for voltage | Within Specification<br>Dissipation factor (DF) maximum limit at 25°C = 0.1% |
| Insulation Resistance (IR) | KEMET Internal | 500 VDC applied for 120 ±5 seconds at 25°C | Within Specification<br>To obtain IR limit, divide MΩ-µF value by the capacitance and compare to GΩ limit. Select the lower of the two limits. 1,000 megohm microfarads or 100 GΩ. |
| Temperature Coefficient of Capacitance (TCC) | KEMET Internal | Capacitance change with reference to +25°C and 0 VDC applied.<br><br>* See part number specification sheet for voltage<br><br>Step / Temperature (°C)<br>1 / +25°C<br>2 / −55°C<br>3 / +25°C (Reference Temperature)<br>4 / +125°C | Within Specification: ±30 ppm / °C |

## Table 4 – Performance & Reliability: Test Methods and Conditions cont.

<table>
<tr><th>Stress</th><th>Reference</th><th>Test Condition</th><th>Limits</th></tr>
<tr><td>Dielectric Withstanding Voltage (DWV)</td><td>KEMET Internal</td><td>See Dielectric Withstanding Voltage (DWV) Table<br>(5 ±1 seconds and charge/discharge not exceeding 50 mA)
<table>
<tr><th>EIA Case Size</th><th>500 V</th><th>630 V</th><th>≥ 1,000 V</th></tr>
<tr><td>0603</td><td rowspan="10">150% of rated voltage</td><td>130% of rated voltage</td><td rowspan="10">120% of rated voltage</td></tr>
<tr><td>0805</td><td>< 620pF 150% of rated voltage<br>≥ 620pF 130% of rated voltage</td></tr>
<tr><td>1206</td><td>< 5.1nF 150% of rated voltage<br>≥ 5.1nF 130% of rated voltage</td></tr>
<tr><td>1210</td><td>< 7.5nF 150% of rated voltage<br>≥ 7.5nF 130% of rated voltage</td></tr>
<tr><td>1808</td><td>< 5.1nF 150% of rated voltage<br>≥ 5.1nF 130% of rated voltage</td></tr>
<tr><td>1812</td><td>< 12nF 150% of rated voltage<br>≥ 12nF 130% of rated voltage</td></tr>
<tr><td>1825</td><td>< 22nF 150% of rated voltage<br>≥ 22nF 130% of rated voltage</td></tr>
<tr><td>2220</td><td>< 27nF 150% of rated voltage<br>≥ 27nF 130% of rated voltage</td></tr>
<tr><td>2225</td><td>< 33nF 150% of rated voltage<br>≥ 33nF 130% of rated voltage</td></tr>
</table></td><td>Cap: Initial Limit<br>DF: Initial Limit<br>IR: Initial Limit<br><br>Withstand test voltage without insulation breakdown or damage.</td></tr>
<tr><td>Aging Rate (Maximum % Capacitance Loss/Decade Hour)</td><td>KEMET Internal</td><td>Maximum % capacitance loss/decade hour</td><td>0% Loss/Decade Hour</td></tr>
<tr><td>Terminal Strength</td><td>KEMET Internal</td><td>Shear stress test per specific case size,<br>Time: 60 ±1 second.
<table>
<tr><th>Case Size</th><th>Force</th></tr>
<tr><td>0603</td><td>5N</td></tr>
<tr><td>0805</td><td>9N</td></tr>
<tr><td>≥ 1206</td><td>18N</td></tr>
</table>
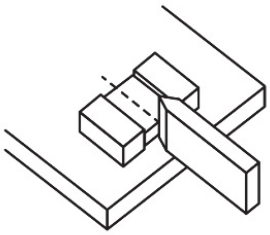 </td><td>No evidence of mechanical damage</td></tr>
<tr><td>Board Flex</td><td>AEC-Q200-005</td><td>Standard Termination System 2.0 mm<br>Flexible Termination System 3.0 mm<br>Test Time: 60 ±5 seconds<br>Ramp Time: 1 mm/second
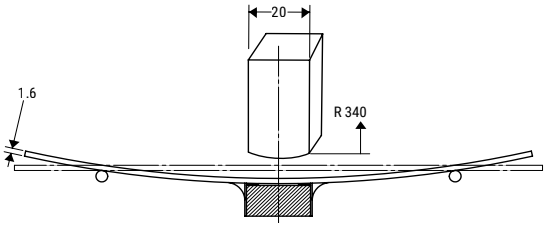
</td><td>No evidence of mechanical damage</td></tr>
<tr><td>Solderability</td><td>J-STD-002</td><td>Condition: 4 hours ± 15 minutes at 155°C dry bake<br>apply all methods<br>Test 245 ±5°C (SnPb & Pb-Free)</td><td>Visual Inspection. 95% coverage on termination. No leaching</td></tr>
<tr><td>Temperature Cycling</td><td>JESD22<br>Method JA-104</td><td>1,000 cycles (−55°C to +125°C)<br>2 – 3 cycles per hour<br>Soak Time 1 or 5 minutes</td><td>Measurement at 24 hours ±4 hours after test conclusion.<br>Cap: Initial Limit<br>DF: Initial Limit<br>IR: Initial Limit</td></tr>
</table>

## Table 4 – Performance & Reliability: Test Methods and Conditions cont.

| Stress | Reference | Test Condition | Limits |
|---|---|---|---|
| Biased Humidity | MIL-STD-202 Method 103 | Load Humidity: 1,000 hours 85°C/85% RH and 200 VDC maximum<br><br>Low Volt Humidity: 1,000 hours 85°C/85% RH and 1.5 V. | Measurement at 24 hours ±4 hours after test conclusion.<br>Within Post Environmental Limits<br>Cap: ±0.3% or ±0.25 pF shift<br>IR: 10% of Initial Limit<br>DF Limits Maximum: 0.5% |
| Moisture Resistance | MIL-STD-202 Method 106 | Number of Cycles Required: 10, 24 hours per cycle.<br>Steps 7a and 7b not required | Cap: Initial Limit<br>DF: Initial Limit<br>IR: Initial Limit |
| Thermal Shock | MIL-STD-202 Method 107 | Number of Cycles Required: 5, (−55°C to 125°C)<br>Dwell time 15 minutes. | Cap: Initial Limit<br>DF: Initial Limit<br>IR: Initial Limit |
| High Temperature Life | MIL-STD-202 Method 108 | 1,000 hours at 125°C with 1.2 X rated voltage applied. | Within Post Environmental Limits<br>Cap: ±0.3% or ±0.25 pF shift<br>DF Limits Maximum: 0.5%<br>IR: 10% of Initial Limit |
| Storage Life | | 1,000 hours at 150°C, Unpowered | |
| Vibration | MIL-STD-202 Method 204 | 5 g's for 20 minutes, 12 cycles each of 3 orientations.<br>Test from 10 – 2,000 Hz | Cap: Initial Limit<br>DF: Initial Limit<br>IR: Initial Limit |
| Mechanical Shock | MIL-STD-202 Method 213 | 1,500 g's 0.5 millisecond Half-sine,<br>Velocity Change: 15.4 feet/second<br>(Condition F) | Cap: Initial Limit<br>DF: Initial Limit<br>IR: Initial Limit |
| Resistance to Solvents | MIL-STD-202 Method 215 | Add Aqueous wash chemical OKEMCLEAN<br>(A 6% concentrated Oakite cleaner) or equivalent.<br>Do not use banned solvents. | Visual Inspection 10X<br>Readable marking, no decoloration or stains.<br>No physical damage. |

## Storage and Handling

Ceramic chip capacitors should be stored in normal working environments. While the chips themselves are quite robust in other environments, solderability will be degraded by exposure to high temperatures, high humidity, corrosive atmospheres, and long term storage. In addition, packaging materials will be degraded by high temperature–reels may soften or warp and tape peel force may increase. KEMET recommends that maximum storage temperature not exceed 40ºC and maximum storage humidity not exceed 70% relative humidity. Temperature fluctuations should be minimized to avoid condensation on the parts and atmospheres should be free of chlorine and sulfur bearing compounds. For optimized solderability chip stock should be used promptly, preferably within 1.5 years of receipt.

## Construction

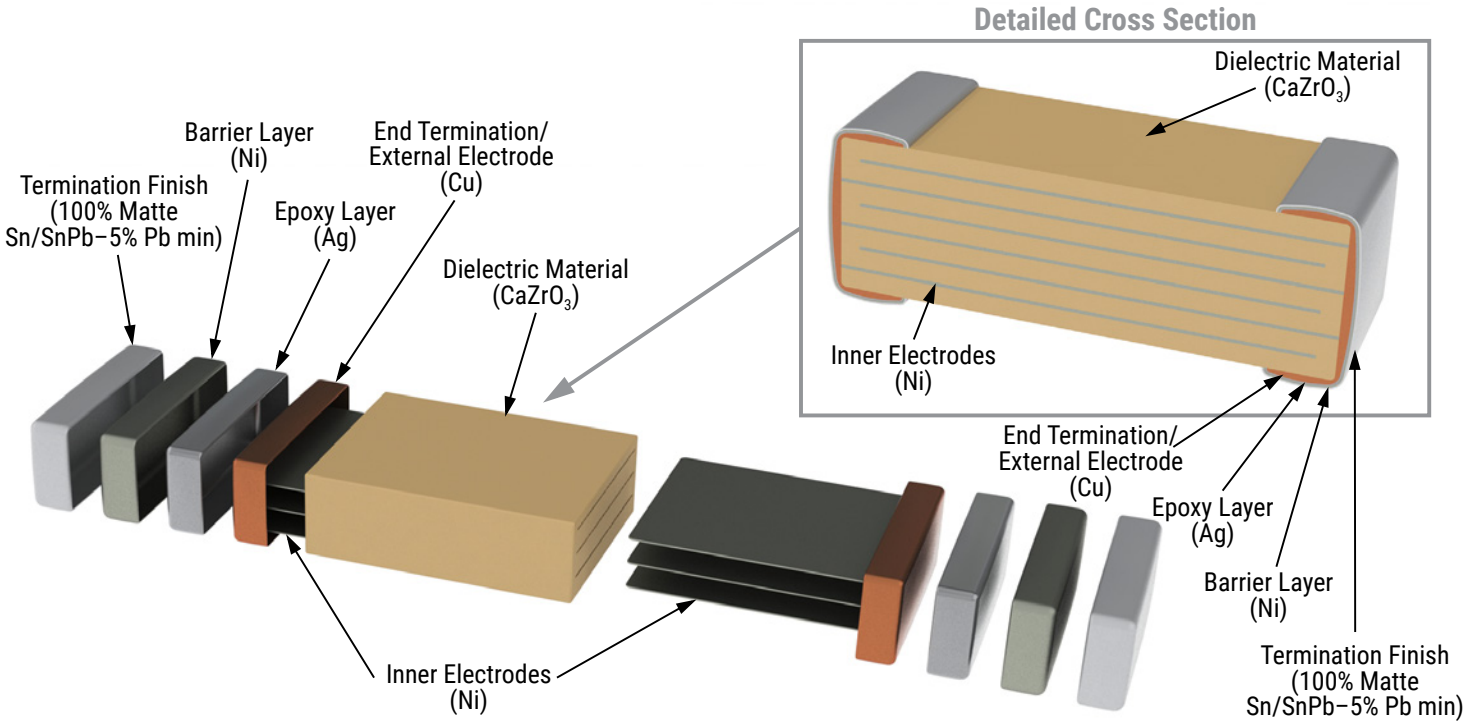


## Capacitor Marking (Optional)

Laser marking option is not available on:

- C0G, Ultra Stable X8R and Y5V dielectric devices
- EIA 0402 case size devices
- EIA 0603 case size devices with Flexible Termination option.
- KPS Commercial and Automotive grade stacked devices.

These capacitors are supplied unmarked only.

## Tape & Reel Packaging Information

KEMET offers multilayer ceramic chip capacitors packaged in 8, 12 and 16 mm tape on 7" and 13" reels in accordance with EIA Standard 481. This packaging system is compatible with all tape-fed automatic pick and place systems. See Table 2 for details on reeling quantities for commercial chips.

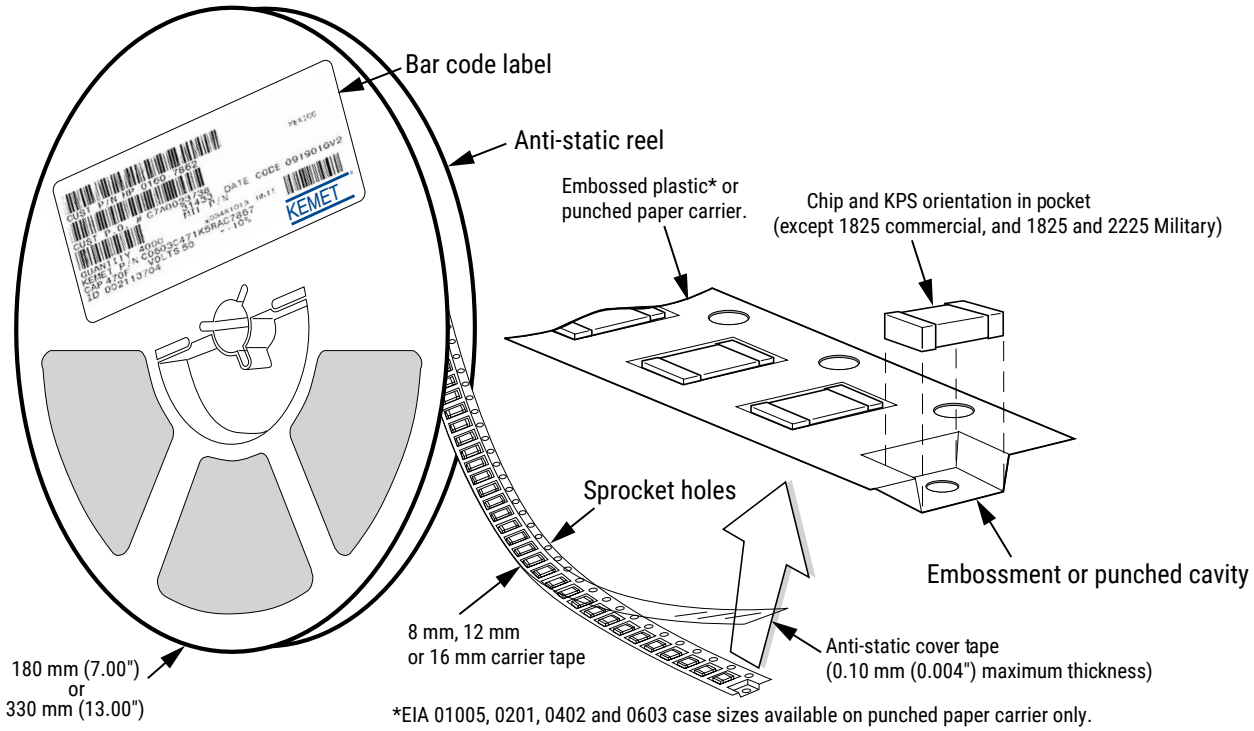


## Table 5 – Carrier Tape Configuration, Embossed Plastic & Punched Paper (mm)

| EIA Case Size | Tape Size (W)* | Embossed Plastic | | Punched Paper | |
|---|---|---|---|---|---|
| | | 7" Reel | 13" Reel | 7" Reel | 13" Reel |
| | | Pitch ($P_1$)* | | Pitch ($P_1$)* | |
| 01005 – 0402 | 8 | | | 2 | 2 |
| 0603 | 8 | | | 4 | 4 |
| 0805 | 8 | 4 | 4 | 4 | 4 |
| 1206 – 1210 | 8 | 4 | 4 | 4 | 4 |
| 1805 – 1808 | 12 | 4 | 4 | | |
| ≥ 1812 | 12 | 8 | 8 | | |
| KPS 1210 | 12 | 8 | 8 | | |
| KPS 1812 and 2220 | 16 | 12 | 12 | | |
| Array 0612 | 8 | 4 | 4 | | |

**Refer to Figures 1 and 2 for W and $P_1$ carrier tape reference locations.*
**Refer to Tables 6 and 7 for tolerance specifications.*

## Figure 1 – Embossed (Plastic) Carrier Tape Dimensions

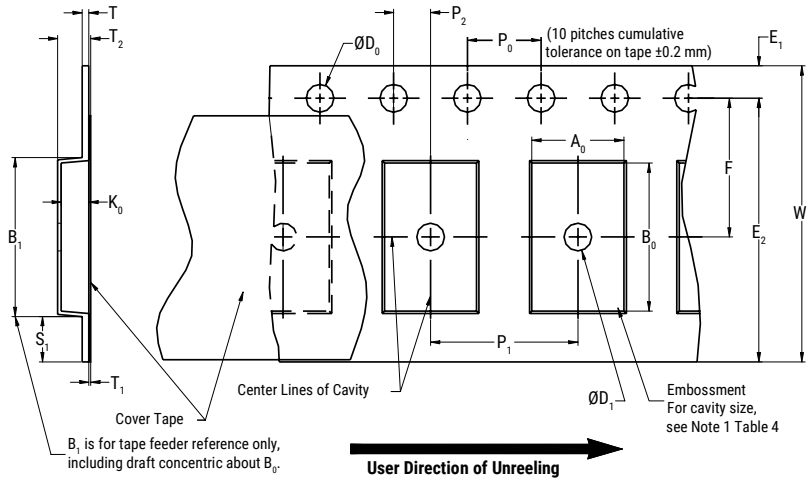


## Table 6 – Embossed (Plastic) Carrier Tape Dimensions

Metric will govern

| Constant Dimensions — Millimeters (Inches) | | | | | | | | | |
|---|---|---|---|---|---|---|---|---|---|
| Tape Size | $D_0$ | $D_1$ Minimum Note 1 | $E_1$ | $P_0$ | $P_2$ | R Reference Note 2 | $S_1$ Minimum Note 3 | T Maximum | $T_1$ Maximum |
| 8 mm | 1.5 +0.10/−0.0 (0.059 +0.004/−0.0) | 1.0 (0.039) | 1.75 ±0.10 (0.069 ±0.004) | 4.0 ±0.10 (0.157 ±0.004) | 2.0 ±0.05 (0.079 ±0.002) | 25.0 (0.984) | 0.600 (0.024) | 0.600 (0.024) | 0.100 (0.004) |
| 12 mm | | 1.5 (0.059) | | | | 30 (1.181) | | | |
| 16 mm | | | | | | | | | |

| Variable Dimensions — Millimeters (Inches) | | | | | | | | |
|---|---|---|---|---|---|---|---|---|
| Tape Size | Pitch | $B_1$ Maximum Note 4 | $E_2$ Minimum | F | $P_1$ | $T_2$ Maximum | W Maximum | $A_0$,$B_0$ & $K_0$ |
| 8 mm | Single (4 mm) | 4.35 (0.171) | 6.25 (0.246) | 3.5 ±0.05 (0.138 ±0.002) | 4.0 ±0.10 (0.157 ±0.004) | 2.5 (0.098) | 8.3 (0.327) | Note 5 |
| 12 mm | Single (4 mm) and double (8 mm) | 8.2 (0.323) | 10.25 (0.404) | 5.5 ±0.05 (0.217 ±0.002) | 8.0 ±0.10 (0.315 ±0.004) | 4.6 (0.181) | 12.3 (0.484) | |
| 16 mm | Triple (12 mm) | 12.1 (0.476) | 14.25 (0.561) | 7.5 ±0.05 (0.138 ±0.002) | 12.0 ±0.10 (0.157 ±0.004) | 4.6 (0.181) | 16.3 (0.642) | |

*1. The embossment hole location shall be measured from the sprocket hole controlling the location of the embossment. Dimensions of the embossment location and the hole location shall be applied independently of each other.*
*2. The tape with or without components shall pass around R without damage (see Figure 6.)*
*3. If $S_1$ < 1.0 mm, there may not be enough area for a cover tape to be properly applied (see EIA Standard 481, paragraph 4.3, section b.)*
*4. $B_1$ dimension is a reference dimension for tape feeder clearance only.*
*5. The cavity defined by $A_0$, $B_0$ and $K_0$ shall surround the component with sufficient clearance that:*
*(a) the component does not protrude above the top surface of the carrier tape.*
*(b) the component can be removed from the cavity in a vertical direction without mechanical restriction, after the top cover tape has been removed.*
*(c) rotation of the component is limited to 20° maximum for 8 and 12 mm tapes and 10° maximum for 16 mm tapes (see Figure 3.)*
*(d) lateral movement of the component is restricted to 0.5 mm maximum for 8 and 12 mm wide tape and to 1.0 mm maximum for 16 mm tape (see Figure 4.)*
*(e) for KPS product, $A_0$ and $B_0$ are measured on a plane 0.3 mm above the bottom of the pocket.*
*(f) see addendum in EIA Standard 481 for standards relating to more precise taping requirements.*

## Figure 2 – Punched (Paper) Carrier Tape Dimensions

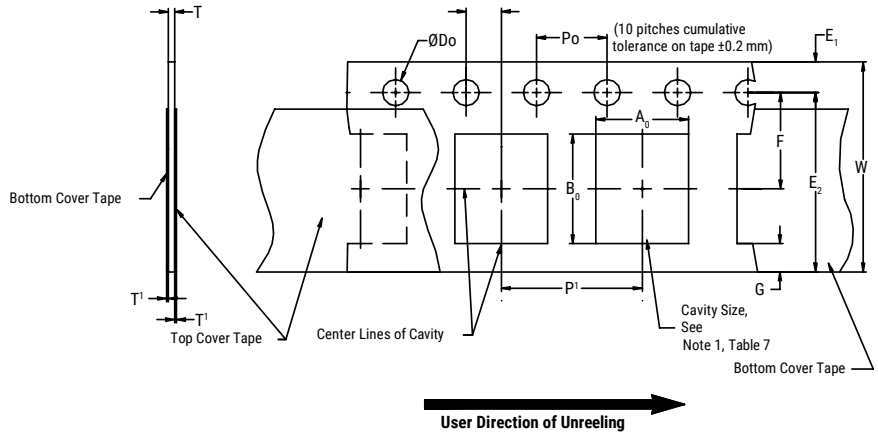


## Table 7 – Punched (Paper) Carrier Tape Dimensions

Metric will govern

| Constant Dimensions — Millimeters (Inches) | | | | | | | |
|---|---|---|---|---|---|---|---|
| Tape Size | $D_0$ | $E_1$ | $P_0$ | $P_2$ | $T_1$ Maximum | G Minimum | R Reference Note 2 |
| 8 mm | 1.5 +0.10 -0.0 (0.059 +0.004 -0.0) | 1.75 ±0.10 (0.069 ±0.004) | 4.0 ±0.10 (0.157 ±0.004) | 2.0 ±0.05 (0.079 ±0.002) | 0.10 (0.004) maximum | 0.75 (0.030) | 25 (0.984) |
| **Variable Dimensions — Millimeters (Inches)** | | | | | | | |
| Tape Size | Pitch | E2 Minimum | F | $P_1$ | T Maximum | W Maximum | $A_0$ $B_0$ |
| 8 mm | Single (4 mm) | 6.25 (0.246) | 3.5 ±0.05 (0.138 ±0.002) | 4.0 ±0.10 (0.157 ±0.004) | 1.1 (0.043) | 8.3 (0.327) | Note 1 |

*1. The cavity defined by $A_0$, $B_0$ and T shall surround the component with sufficient clearance that:*

*a) the component does not protrude beyond either surface of the carrier tape.*

*b) the component can be removed from the cavity in a vertical direction without mechanical restriction, after the top cover tape has been removed.*

*c) rotation of the component is limited to 20° maximum (see Figure 3.)*

*d) lateral movement of the component is restricted to 0.5 mm maximum (see Figure 4.)*

*e) see addendum in EIA Standard 481 for standards relating to more precise taping requirements.*

*2. The tape with or without components shall pass around R without damage (see Figure 6.)*

## Packaging Information Performance Notes

**1. Cover Tape Break Force:** 1.0 kg minimum.
**2. Cover Tape Peel Strength:** The total peel strength of the cover tape from the carrier tape shall be:

| Tape Width | Peel Strength |
|---|---|
| 8 mm | 0.1 to 1.0 newton (10 to 100 gf) |
| 12 and 16 mm | 0.1 to 1.3 newton (10 to 130 gf) |

The direction of the pull shall be opposite the direction of the carrier tape travel. The pull angle of the carrier tape shall be 165° to 180° from the plane of the carrier tape. During peeling, the carrier and/or cover tape shall be pulled at a velocity of 300 ±10 mm/minute.
**3. Labeling:** Bar code labeling (standard or custom) shall be on the side of the reel opposite the sprocket holes. *Refer to EIA Standards 556 and 624*.

## Figure 3 – Maximum Component Rotation

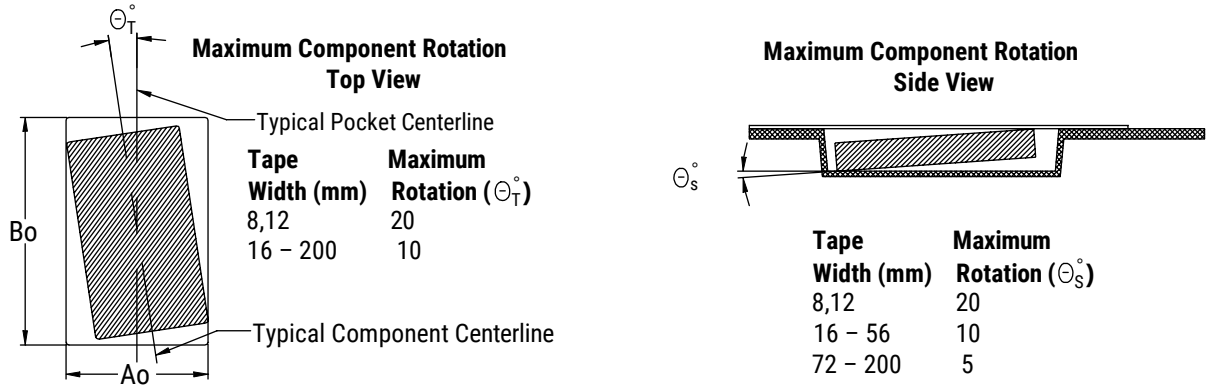


## Figure 4 – Maximum Lateral Movement

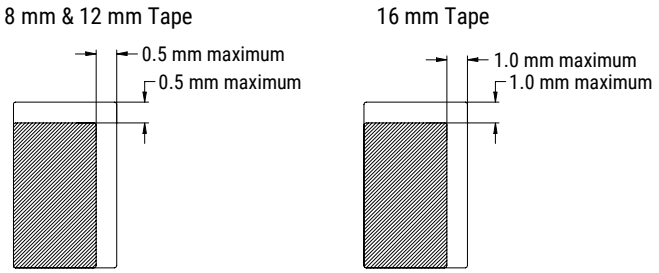


## Figure 5 – Bending Radius

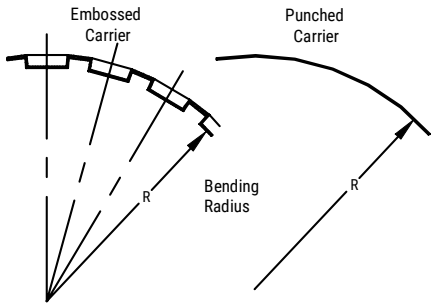

## Figure 6 – Reel Dimensions

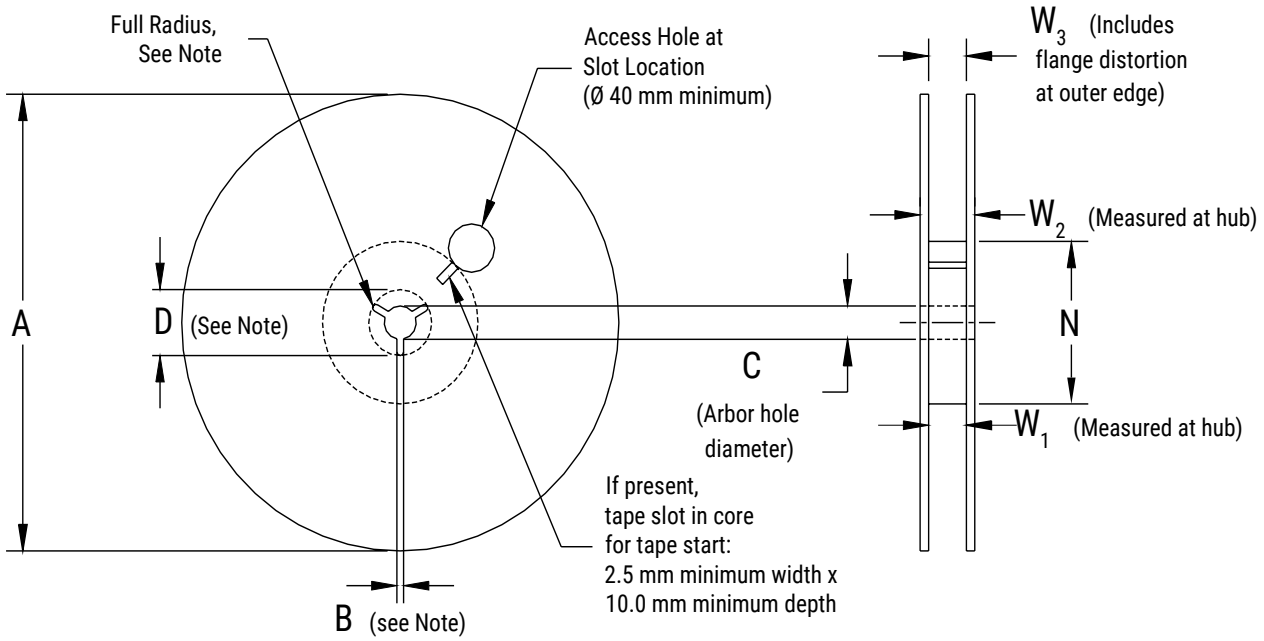


Note: Drive spokes optional; if used, dimensions B and D shall apply.

## Table 8 – Reel Dimensions

Metric will govern

| Constant Dimensions — Millimeters (Inches) | | | | |
|---|---|---|---|---|
| Tape Size | A | B Minimum | C | D Minimum |
| 8 mm | 178 ±0.20 (7.008 ±0.008) or 330 ±0.20 (13.000 ±0.008) | 1.5 (0.059) | 13.0 +0.5/−0.2 (0.521 +0.02/−0.008) | 20.2 (0.795) |
| 12 mm | | | | |
| 16 mm | | | | |

| Variable Dimensions — Millimeters (Inches) | | | | |
|---|---|---|---|---|
| Tape Size | N Minimum | $W_1$ | $W_2$ Maximum | $W_3$ |
| 8 mm | 50 (1.969) | 8.4 +1.5/−0.0 (0.331 +0.059/−0.0) | 14.4 (0.567) | Shall accommodate tape width without interference |
| 12 mm | | 12.4 +2.0/−0.0 (0.488 +0.078/−0.0) | 18.4 (0.724) | |
| 16 mm | | 16.4 +2.0/−0.0 (0.646 +0.078/−0.0) | 22.4 (0.882) | |

## Figure 7 – Tape Leader & Trailer Dimensions

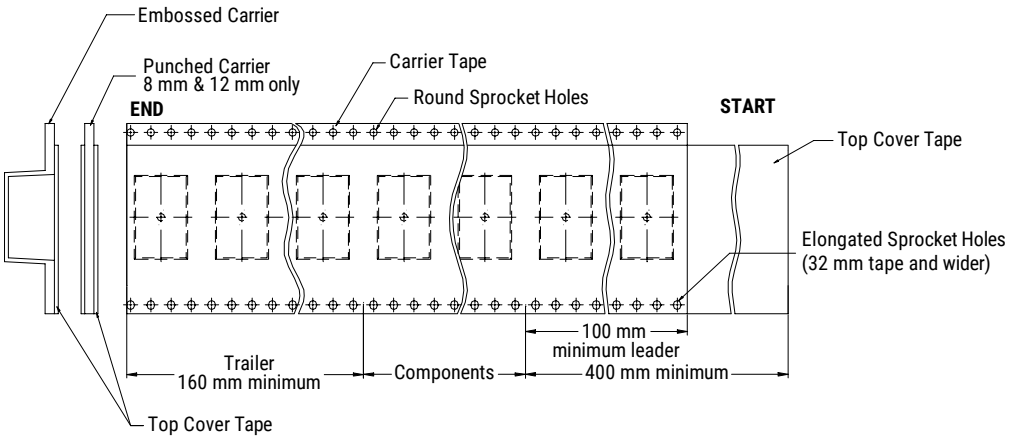


## Figure 8 – Maximum Camber

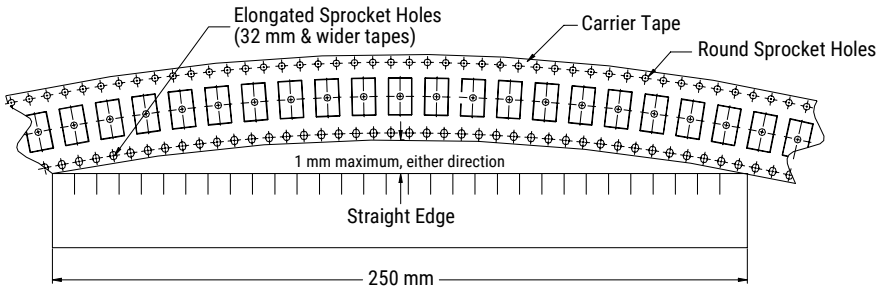

# Application Guide

**Solder Fluxes and Cleaning**
The use of water-soluble fluxes provides advantages of excellent solderability due to high activation. However, these fluxes contain organic acids that can induce arcing under high DC or AC voltages. Notable problem areas are underneath the MLCC where flux can be trapped between the ceramic material and PCB. It is therefore critical that PCBs are properly cleaned to remove all flux residue to maintain reliability.

**Coating for High Voltage MLCCs**
For MLCC ratings ≥1500V, it is recommended to apply a conformal coating to MLCC to prevent surface arcing. To reduce possibility of inducing cracks in the MLCC, select a coating with thermal expansions close to that of the MLCC.

| Dielectric | CTE (ppm/°C) |
|---|---|
| Class II $BaTiO_3$ | 10.7 |
| Class I $CaZrO_3$ | 9.8 |

**Slits in PCB**
It is recommended to apply a slit in the PCB under the MLCC to improve washing of flux residue that may get trapped underneath. In some cases, it is not possible to slit entirely through the PCB due to underlying metal planes. It is also acceptable to apply a recessed slit under the MLCC which will also promote cleaning.
- Recommended for case sizes ≥1206
- The width (w) of the slit should be 1mm
- Length of the slit should be as short as possible to prevent damaging the MLCC due to mechanical stress of the PCB.
- Slits also reduce the risk of solder balls under MLCC which decreased the creepage distance.

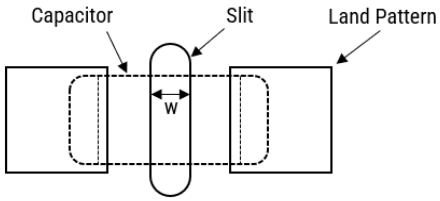


**Solder Resist**
If a slit cannot be applied as above, it is recommended to not use solder resist directly under the MLCC. The use of solder resist material reduces the distance between MLCC ceramic material and PCB thus making it difficult to clean.

**Solder Balls**
Improper reflow techniques and/or improper washing can induce solder balls under or adjacent to the MLCC. Solder balls reduce the creepage distance between the MLCC terminations and increase the risk of arcing or damage to the ceramic material. To reduce the risk of solder balls:
- Follow KEMET's solder recommendations as outlined in the datasheet.
- If performing a cleaning procedure, properly clean the PCB per KEMET's cleaning recommendations.
- Add slit to the PCB as shown above.

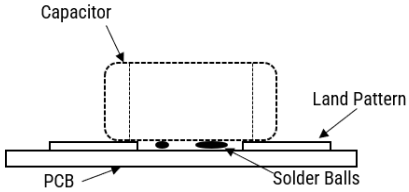

## KEMET Electronics Corporation Sales Offices

For a complete list of our global sales offices, please visit www.kemet.com/sales.

## Disclaimer

YAGEO Corporation and its affiliates do not recommend the use of commercial or automotive grade products for high reliability applications or manned space flight.

All product specifications, statements, information and data (collectively, the "Information") in this datasheet are subject to change. The customer is responsible for checking and verifying the extent to which the Information contained in this publication is applicable to an order at the time the order is placed. All Information given herein is believed to be accurate and reliable, but it is presented without guarantee, warranty, or responsibility of any kind, expressed or implied.

Statements of suitability for certain applications are based on KEMET Electronics Corporation's ("KEMET") knowledge of typical operating conditions for such applications, but are not intended to constitute – and KEMET specifically disclaims – any warranty concerning suitability for a specific customer application or use. The Information is intended for use only by customers who have the requisite experience and capability to determine the correct products for their application. Any technical advice inferred from this Information or otherwise provided by KEMET with reference to the use of KEMET's products is given gratis, and KEMET assumes no obligation or liability for the advice given or results obtained.

Although KEMET designs and manufactures its products to the most stringent quality and safety standards, given the current state of the art, isolated component failures may still occur. Accordingly, customer applications which require a high degree of reliability or safety should employ suitable designs or other safeguards (such as installation of protective circuitry or redundancies) in order to ensure that the failure of an electrical component does not result in a risk of personal injury or property damage.

Although all product–related warnings, cautions and notes must be observed, the customer should not assume that all safety measures are indicated or that other measures may not be required.

*KEMET is a registered trademark of KEMET Electronics Corporation.*