High Voltage with Flexible Termination System (HV FT-CAP) X7R Dielectric, 500 – 3,000 VDC (Automotive Grade)

Overview

KEMET's Automotive Grade High Voltage Surface Mount MLCCs with Flexible Termination (HV FT-CAP) address the primary failure mode of MLCCs—flex cracks, which are typically the result of excessive tensile and shear stresses produced during board flexure and thermal cycling. Featuring several of the highest CV (capacitance/voltage) values available in the industry, these devices utilize a pliable and conductive silver epoxy between the base metal and nickel barrier layers of the termination system. The addition of this epoxy layer inhibits the transfer of board stress to the rigid ceramic body, therefore mitigating flex cracks which can result in low IR or short circuit failures. Although flexible termination technology does not eliminate the potential for mechanical damage that may propagate during extreme environmental and handling conditions, it does provide superior flex performance over standard termination systems.

Combined with the stability of an X7R dielectric and designed to accommodate all capacitance requirements, these flex-robust devices are RoHS-compliant, offer up to 5 mm of flex-bend capability and exhibits a predictable change in capacitance with respect to time and voltage. Capacitance change with reference to ambient temperature is limited to ±15% from −55°C to +125°C.

Whether under-hood or in-cabin, these capacitors are designed to provide reliable performance in mission and safety critical automotive circuits. Stricter testing protocol and inspection criteria have been established for automotive grade products in recognition of potentially harsh environmental conditions. KEMET automotive grade series capacitors meet the demanding Automotive Electronics Council's AEC-Q200 qualification requirements.

Applications

- Charging stations
- LCD fluorescent backlight ballasts
- Voltage multiplier circuits
- DC/DC converters
- Power supply
- LAN/WAN interface
- High voltage decoupling
- Filters
- DC blocking
- ESD Protection

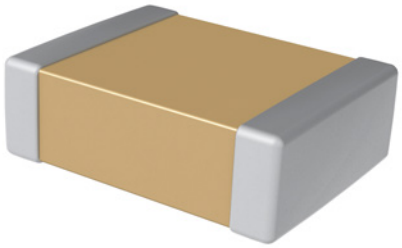

Ordering Information

C	1210	X	154	K	C	R	A	C	AUTO
Ceramic	Case Size (L" x W")	Specification/ Series	Capacitance Code (pF)	Capacitance Tolerance	Rated Voltage (VDC)	Dielectric	Failure Rate/ Design	Termination Finish[1]	Packaging/Grade (C-Spec)
	0603 0805 1206 1210 1808 1812 1825 2220 2225	X = Flexible termination	Two significant digits and number of zeros.	J = ±5% K = ±10% M = ±20%	C = 500 B = 630 D = 1,000 F = 1,500 G = 2,000 Z = 2,500 H = 3,000	R = X7R	A = N/A	C = 100% Matte Sn	See "Packaging C-Spec Ordering Options Table"

[1] *Additional termination finish options may be available. Contact KEMET for details.*

© KEMET Electronics Corporation • One East Broward Boulevard
Fort Lauderdale, FL 33301 USA • 954-766-2800 • www.kemet.com

Packaging C-Spec Ordering Options Table

Packaging Type[1]	Packaging/Grade Ordering Code (C-Spec)[2]
7" Reel	AUTO
13" Reel/Unmarked	AUTO7411 (EIA 0603 and smaller case sizes) AUTO7210 (EIA 0805 and larger case sizes)

[1] Reeling tape options (Paper or Plastic) are dependent on capacitor case size (L" x W") and thickness dimension. See "Chip Thickness/Tape & Reel Packaging Quantities" and "Tape & Reel Packaging Information".

[2] All Automotive packaging C-Specs listed exclude the option to laser mark components. Please contact KEMET if you require a laser marked option. For more information see "Capacitor Marking".

[2] For additional Information regarding "AUTO" C-Spec options, see "Automotive C-Spec Information".

Benefits

- AEC-Q200 automotive qualified
- −55°C to +125°C operating temperature range
- Industry-leading CV values
- Superior flex performance (up to 5 mm)
- Exceptional performance at high frequencies
- Lead (Pb)-free, RoHS and REACH compliant
- EIA 0603, 0805, 1206, 1210, 1808, 1812, 1825, 2220, and 2225 case sizes
- DC voltage ratings of 500 V, 630 V, 1 KV, 1.5 KV, 2 KV, 2.5 KV, and 3 KV
- Capacitance offerings ranging from 10 pF to 560 nF
- Available capacitance tolerances of ±5%, ±10% or ±20%
- Low ESR and ESL
- Non-polar device, minimizing installation concerns
- 100% pure matte tin-plated termination finish allowing for excellent solderability

Application Note

X7R dielectric is not recommended for AC line filtering or pulse applications. These capacitors and/or the assembled circuit board containing these capacitors may require a protective surface coating to prevent external surface arcing.

Automotive C-Spec Information

KEMET automotive grade products meet or exceed the requirements outlined by the Automotive Electronics Council. Details regarding test methods and conditions are referenced in document AEC–Q200, Stress Test Qualification for Passive Components. These products are supported by a Product Change Notification (PCN) and Production Part Approval Process warrant (PPAP).

Automotive products offered through our distribution channel have been assigned an inclusive ordering code C-Spec, "AUTO." This C-Spec was developed in order to better serve small and medium-sized companies that prefer an automotive grade component without the requirement to submit a customer Source Controlled Drawing (SCD) or specification for review by a KEMET engineering specialist. This C-Spec is therefore not intended for use by KEMET OEM automotive customers and are not granted the same "privileges" as other automotive C-Specs. Customer PCN approval and PPAP request levels are limited (see details below.)

Product Change Notification (PCN)
The KEMET product change notification system is used to communicate primarily the following types of changes:
- Product/process changes that affect product form, fit, function, and/or reliability
- Changes in manufacturing site
- Product obsolescence

KEMET Automotive C-Spec	Customer Notification Due To:		Days Prior To Implementation
	Process/Product change	Obsolescence*	
KEMET assigned[1]	Yes (with approval and sign off)	Yes	180 days minimum
AUTO	Yes (without approval)	Yes	90 days minimum

[1] *KEMET assigned C-Specs require the submittal of a customer SCD or customer specification for review. For additional information contact KEMET.*

Production Part Approval Process (PPAP)
The purpose of the Production Part Approval Process is:
- To ensure that supplier can meet the manufacturability and quality requirements for the purchased parts.
- To provide the evidence that all customer engineering design records and specification requirements are properly understood and fulfilled by the manufacturing organization.
- To demonstrate that the established manufacturing process has the potential to produce the part.

KEMET Automotive C-Spec	PPAP Level				
	1	2	3	4	5
KEMET assigned[1]	●	●	●	●	●
AUTO			○		

[1] *KEMET assigned C-Specs require the submittal of a customer SCD or customer specification for review. For additional information contact KEMET.*

● Part number specific PPAP available with customer information included.
○ Product family PPAP only

Dimensions – Millimeters (Inches)

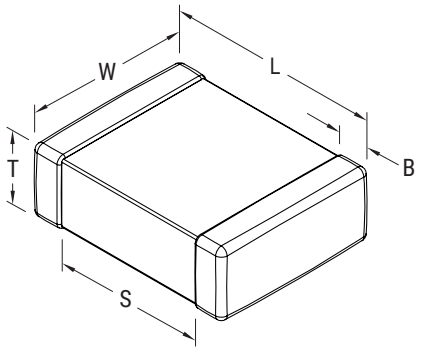

EIA Size Code	Metric Size Code	L Length	W Width	T Thickness	B Bandwidth	S Separation Minimum	Mounting Technique
0603	1608	1.60 (0.063) ±0.17 (0.007)	0.80 (0.032) ±0.15 (0.006)	See Table 2 for Thickness	0.45 (0.018) ±0.15 (0.006)	0.40 (0.016)	Solder Wave or Solder Reflow
0805	2012	2.00 (0.079) ±0.30 (0.012)	1.25 (0.049) ±0.30 (0.012)		0.50 (0.02) ±0.25 (0.010)	0.60 (0.024)	
1206	3216	3.30 (0.130) ±0.40 (0.016)	1.60 (0.063) ±0.35 (0.013)		0.60 (0.024) ±0.25 (0.010)	1.50 (0.060)	
1210	3225	3.30 (0.130) ±0.40 (0.016)	2.60 (0.102) ±0.30 (0.012)		0.60 (0.024) ±0.25 (0.010)	1.50 (0.060)	Solder Reflow Only
1808	4520	4.70 (0.185) ±0.50 (0.020)	2.00 (0.079) ±0.20 (0.008)		0.70 (0.028) ±0.35 (0.014)	2.90 (0.114)	
1812	4532	4.50 (0.178) ±0.40 (0.016)	3.20 (0.126) ±0.30 (0.012)		0.70 (0.028) ±0.35 (0.014)	2.30 (0.091)	
1825	4564	4.60 (0.181) ±0.40 (0.016)	6.40 (0.252) ±0.40 (0.016)		0.70 (0.028) ±0.35 (0.014)	2.30 (0.091)	
2220	5650	5.90 (0.232) ±0.75 (0.030)	5.00 (0.197) ±0.40 (0.016)		0.70 (0.028) ±0.35 (0.014)	3.50 (0.138)	
2225	5664	5.90 (0.232) ±0.75 (0.030)	6.40 (0.248) ±0.40 (0.016)		0.70 (0.028) ±0.35 (0.014)	3.20 (0.126)	

Qualification/Certification

Automotive Grade products meet or exceed the requirements outlined by the Automotive Electronics Council. Details regarding test methods and conditions are referenced in document AEC–Q200, Stress Test Qualification for Passive Components. For additional information regarding the Automotive Electronics Council and AEC–Q200, please visit their website at www.aecouncil.com.

Environmental Compliance

Lead (Pb)-free, RoHS, and REACH compliant without exemptions.

Electrical Parameters/Characteristics

Item	Parameters/Characteristics
Operating Temperature Range	−55°C to +125°C
Capacitance Change with Reference to +25°C and 0 Vdc Applied (TCC)	±15%
[1]Aging Rate (Maximum % Capacitance Loss/Decade Hour)	3.0%
[2]Dielectric Withstanding Voltage (DWV)	150% of rated voltage for voltage rating of < 1,000V 120% of rated voltage for voltage rating of ≥ 1,000V (5±1 seconds and charge/discharge not exceeding 50 mA)
[3]Dissipation Factor (DF) Maximum Limit at 25°C	2.5%
[4]Insulation Resistance (IR) Minimum Limit at 25°C	See Insulation Resistance Limit Table (500 VDC applied for 120 ±5 seconds at 25°C)

[1] Regarding Aging Rate: Capacitance measurements (including tolerance) are indexed to a referee time of 1,000 hours.
[2] DWV is the voltage a capacitor can withstand (survive) for a short period of time. It exceeds the nominal and continuous working voltage of the capacitor.
[3] Capacitance and dissipation factor (DF) measured under the following conditions:
1kHz ±50Hz and 1.0 ±0.2 V_{rms} if capacitance ≤10 µF
120Hz ±10Hz and 0.5 ±0.1 V_{rms} if capacitance >10 µF
[4] To obtain IR limit, divide MΩ-µF value by the capacitance and compare to GΩ limit. Select the lower of the two limits.
Note: When measuring capacitance it is important to ensure the set voltage level is held constant. The HP4284 & Agilent E4980 have a feature known as Automatic Level Control (ALC). The ALC feature should be switched to "ON."

Post Environmental Limits

High Temperature Life, Biased Humidity, Moisture Resistance					
Dielectric	Rated DC Voltage	Capacitance Value	Dissipation Factor (%)	Capacitance Shift	Insulation Resistance
X7R	> 25	All	3.0	±20%	10% of Initial Limit
	16/25		5.0		
	< 16		7.5		

Insulation Resistance Limit Table (X7R Dielectric)

EIA Case Size	1,000 Megohm Microfarads or 100 GΩ	100 Megohm Microfarads or 10 GΩ
0603	N/A	All
0805	< .0039 µF	≥ .0039 µF
1206	< 0.012 µF	≥ 0.012 µF
1210	< 0.033 µF	≥ 0.033 µF
1808	< 0.018 µF	≥ 0.018 µF
1812	< 0.027 µF	≥ 0.027 µF
1825	< 0.120 µF	≥ 0.120 µF
2220	< 0.150 µF	≥ 0.150 µF
2225	< 0.180 µF	≥ 0.180 µF

Table 1A – Capacitance Range/Selection Waterfall (0603 – 1812 Case Sizes)

Cap	Cap Code	Case Size/ Series	C0603X			C0805X			C1206X					C1210X					C1808X							C1812X						
		Voltage Code	C	B	D	C	B	D	C	B	D	F	G	C	B	D	F	G	C	B	D	F	G	Z	H	C	B	D	F	G	Z	H
		Rated Voltage (VDC)	500	630	1000	500	630	1000	500	630	1000	1500	2000	500	630	1000	1500	2000	500	630	1000	1500	2000	2500	3000	500	630	1000	1500	2000	2500	3000
		Capacitance Tolerance	Product Availability and Chip Thickness Codes - See Table 2 for Chip Thickness Dimensions																													
10 pF	100	J K M				DG	DG	DG	ES	ES	ES	ES	ES	FM	FM	FM	FM	FM	LB	LB	LB	LB	LB	LB	LB	GB	GB	GB	GB	GB	GB	GB
11 pF	110	J K M				DG	DG	DG	ES	ES	ES	ES	ES	FM	FM	FM	FM	FM	LB	LB	LB	LB	LB	LB	LB	GB	GB	GB	GB	GB	GB	GB
12 pF	120	J K M				DG	DG	DG	ES	ES	ES	ES	ES	FM	FM	FM	FM	FM	LB	LB	LB	LB	LB	LB	LB	GB	GB	GB	GB	GB	GB	GB
13 pF	130	J K M				DG	DG	DG	ES	ES	ES	ES	ES	FM	FM	FM	FM	FM	LB	LB	LB	LB	LB	LB	LB	GB	GB	GB	GB	GB	GB	GB
15 pF	150	J K M				DG	DG	DG	ES	ES	ES	ES	ES	FM	FM	FM	FM	FM	LB	LB	LB	LB	LB	LB	LB	GB	GB	GB	GB	GB	GB	GB
16 pF	160	J K M				DG	DG	DG	ES	ES	ES	ES	ES	FM	FM	FM	FM	FM	LB	LB	LB	LB	LB	LB	LB	GB	GB	GB	GB	GB	GB	GB
18 pF	180	J K M				DG	DG	DG	ES	ES	ES	ES	ES	FM	FM	FM	FM	FM	LB	LB	LB	LB	LB	LB	LB	GB	GB	GB	GB	GB	GB	GB
20 pF	200	J K M				DG	DG	DG	ES	ES	ES	ES	ES	FM	FM	FM	FM	FM	LB	LB	LB	LB	LB	LB	LB	GB	GB	GB	GB	GB	GB	GB
22 pF	220	J K M				DG	DG	DG	ES	ES	ES	ES	ES	FM	FM	FM	FM	FM	LB	LB	LB	LB	LB	LB	LB	GB	GB	GB	GB	GB	GB	GB
24 pF	240	J K M				DG	DG	DG	ES	ES	ES	ES	ES	FM	FM	FM	FM	FM	LB	LB	LB	LB	LB	LB	LB	GB	GB	GB	GB	GB	GB	GB
27 pF	270	J K M				DG	DG	DG	ES	ES	ES	ES	ES	FM	FM	FM	FM	FM	LB	LB	LB	LB	LB	LB	LB	GB	GB	GB	GB	GB	GB	GB
30 pF	300	J K M				DG	DG	DG	ES	ES	ES	ES	ES	FM	FM	FM	FM	FM	LB	LB	LB	LB	LB	LB	LB	GB	GB	GB	GB	GB	GB	GB
33 pF	330	J K M				DG	DG	DG	ES	ES	ES	ES	ES	FM	FM	FM	FM	FM	LB	LB	LB	LB	LB	LB	LB	GB	GB	GB	GB	GB	GB	GB
36 pF	360	J K M				DG	DG	DG	ES	ES	ES	ES	ES	FM	FM	FM	FM	FM	LB	LB	LB	LB	LB	LB	LB	GB	GB	GB	GB	GB	GB	GB
39 pF	390	J K M				DG	DG	DG	ES	ES	ES	ES	ES	FM	FM	FM	FM	FM	LB	LB	LB	LB	LB	LB	LB	GB	GB	GB	GB	GB	GB	GB
43 pF	430	J K M				DG	DG	DG	ES	ES	ES	ES	ES	FM	FM	FM	FM	FM	LB	LB	LB	LB	LB	LB	LB	GB	GB	GB	GB	GB	GB	GB
47 pF	470	J K M				DG	DG	DG	ES	ES	ES	ES	ES	FM	FM	FM	FM	FM	LB	LB	LB	LB	LB	LB	LB	GB	GB	GB	GB	GB	GB	GB
51 pF	510	J K M				DG	DG	DG	ES	ES	ES	ES	ES	FM	FM	FM	FM	FM	LB	LB	LB	LB	LB	LB	LB	GB	GB	GB	GB	GB	GB	GB
56 pF	560	J K M				DG	DG	DG	ES	ES	ES	ES	ES	FM	FM	FM	FM	FM	LB	LB	LB	LB	LB	LB	LB	GB	GB	GB	GB	GB	GB	GB
62 pF	620	J K M				DG	DG	DG	ES	ES	ES	ES	ES	FM	FM	FM	FM	FM	LB	LB	LB	LB	LB	LB	LB	GB	GB	GB	GB	GB	GB	GB
68 pF	680	J K M				DG	DG	DG	ES	ES	ES	ES	ES	FM	FM	FM	FM	FM	LB	LB	LB	LB	LB	LB	LB	GB	GB	GB	GB	GB	GB	GB
75 pF	750	J K M				DG	DG	DG	ES	ES	ES	ES	ES	FM	FM	FM	FM	FM	LB	LB	LB	LB	LB	LB	LB	GB	GB	GB	GB	GB	GB	GB
82 pF	820	J K M				DG	DG	DG	ES	ES	ES	ES	EF	FM	FM	FM	FM	FM	LB	LB	LB	LB	LB	LB	LB	GB	GB	GB	GB	GB	GB	GB
91 pF	910	J K M				DG	DG	DG	ES	ES	ES	ES	EF	FM	FM	FM	FM	FM	LB	LB	LB	LB	LB	LB	LB	GD	GD	GD	GD	GD	GD	GD
100 pF	101	J K M				DG	DG	DG	ES	ES	ES	ES	EF	FM	FM	FM	FM	FM	LB	LB	LB	LB	LB	LC	LB	GD	GD	GD	GD	GD	GD	GD
110 pF	111	J K M				DG	DG	DG	ES	ES	ES	ES	EU	FM	FM	FM	FM	FM	LB	LB	LB	LB	LB	LC	LB	GD	GD	GD	GD	GD	GD	GD
120 pF	121	J K M				DG	DG	DG	ES	ES	ES	ES	EU	FM	FM	FM	FM	FM	LA	LA	LA	LA	LB	LC	LB	GD	GD	GD	GD	GD	GD	GD
130 pF	131	J K M				DG	DG	DG	ES	ES	ES	ES	EU	FZ	FZ	FZ	FM	FM	LB	LB	LB	LB	LB	LB	LB	GD	GD	GD	GD	GD	GD	GD
150 pF	151	J K M				DG	DG	DG	ES	ES	ES	EF	EU	FZ	FZ	FZ	FM	FM	LB	LB	LB	LB	LB	LB	LB	GD	GD	GD	GD	GD	GD	GK
180 pF	181	J K M				DG	DG	DG	ES	ES	ES	EF	EU	FZ	FZ	FZ	FM	FM	LB	LB	LB	LB	LB	LB	LB	GD	GD	GD	GD	GD	GD	GK
220 pF	221	J K M				DG	DG	DG	ES	ES	ES	EU	EU	FZ	FZ	FZ	FM	FM	LB	LB	LB	LB	LB	LB	LB	GB	GB	GB	GB	GB	GD	GB
270 pF	271	J K M				DG	DG	DG	ES	ES	ES	EU	EU	FZ	FZ	FZ	FK	FK	LC	LC	LC	LC	LC	LC	LC	GB	GB	GB	GB	GB	GH	GB
330 pF	331	J K M				DG	DG	DG	ES	ES	EF	EU	EU	FZ	FZ	FZ	FK	FK	LC	LC	LC	LC	LC	LC	LC	GB	GB	GB	GB	GB	GH	GB
390 pF	391	J K M				DG	DG	DG	ES	ES	EF	EU	EU	FZ	FZ	FZ	FK	FS	LB	LB	LB	LB	LB	LB	LC	GB	GB	GB	GB	GD	GK	GH
470 pF	471	J K M				DG	DG	DG	ES	ES	EF	EF	EU	FZ	FM	FM	FS	FS	LB	LB	LB	LB	LB	LB	LC	GB	GB	GB	GB	GD	GK	GH
560 pF	561	J K M				DG	DG	DG	ES	ES	EF	EF	EU	FL	FL	FL	FL	FL	LB	LB	LB	LB	LB	LB	LC	GB	GB	GB	GD	GH	GH	GK
680 pF	681	J K M				DG	DG	DG	ES	ES	EF	EF	EU	FL	FL	FL	FL	FL	LA	LA	LA	LA	LB	LC	LC	GB	GB	GB	GD	GH	GH	GK
820 pF	821	J K M				DG	DG	DG	ES	ES	ES	EF	EU	FL	FL	FL	FL	FL	LA	LA	LA	LA	LB	LC	LC	GB	GB	GB	GD	GH	GH	GK
1,000 pF	102	J K M	CG	CG	CG	DG	DG	DG	ES	ES	ES	EF	EU	FL	FL	FL	FL	FL	LA	LA	LA	LA	LB	LC	LC	GB	GB	GB	GB	GH	GH	GK
1,200 pF	122	J K M	CG	CG		DG	DG	DG	ES	ES	ES	EU	EU	FL	FL	FL	FL	FM	LB	LB	LB	LB	LC	LA		GB	GB	GB	GB	GH	GK	GK
1,500 pF	152	J K M	CG	CG		DG	DG	DG	ES	ES	ES	EU	EU	FL	FL	FL	FL	FM	LB	LB	LB	LB	LC	LB		GB	GB	GB	GB	GH	GK	
1,800 pF	182	J K M	CG			DG	DG	DG	ES	ES	ES	EU	EU	FL	FL	FL	FL	FM	LB	LB	LB	LB	LC	LC		GB	GD	GD	GB	GH	GK	
2,200 pF	222	J K M	CG			DG	DG	DG	ES	ES	ES	EU	EU	FL	FL	FL	FL	FM	LA	LA	LA	LB	LC	LC		GB	GH	GH	GB	GH	GK	
2,700 pF	272	J K M	CG			DG	DG	DG	ES	ES	ES	EU		FL	FL	FL	FL	FM	LA	LA	LA	LB	LC			GB	GB	GB	GH	GK	GM	
3,300 pF	332	J K M	CG			DG	DG	DG	ES	ES	ES	EU		FL	FL	FL	FL	FM	LA	LA	LA	LB	LA			GB	GB	GB	GH	GK	GM	
3,900 pF	392	J K M	CG			DG	DG	DG	ES	ES	ES	EU		FL	FL	FL	FL	FK	LA	LA	LA	LB	LB			GB	GB	GB	GH	GM	GO	
4,700 pF	472	J K M				DG	DG	DG	ES	ES	ES	EU		FL	FL	FL	FL	FK	LA	LA	LA	LB	LC			GH	GH	GH	GH	GH	GO	
5,600 pF	562	J K M				DG	DG		ES	EF	EF	EF		FL	FL	FL	FM	FK	LA	LB	LB	LC				GH	GH	GH	GK	GK		
6,800 pF	682	J K M				DG	DG		EF	EF	EF	EF		FL	FL	FL	FM	FS	LA	LB	LB	LC				GH	GH	GH	GK	GM		
8,200 pF	822	J K M				DG	DG		EF	EU	EU	EF		FL	FL	FL	FK		LA	LB	LB	LC				GH	GH	GH	GK	GM		
10,000 pF	103	J K M				DG	DG		EF	EU	EU	EU		FL	FL	FL	FK		LA	LB	LB	LC				GH	GH	GH	GK	GO		
12,000 pF	123	J K M				DG	DG		EU	EJ	EJ			FL	FL	FL	FK		LA	LC	LC	LB				GB	GK	GK	GK			
Cap	Cap Code	Rated Voltage (VDC)	500	630	1000	500	630	1000	500	630	1000	1500	2000	500	630	1000	1500	2000	500	630	1000	1500	2000	2500	3000	500	630	1000	1500	2000	2500	3000
		Voltage Code	C	B	D	C	B	D	C	B	D	F	G	C	B	D	F	G	C	B	D	F	G	Z	H	C	B	D	F	G	Z	H
		Case Size/ Series	C0603X			C0805X			C1206X					C1210X					C1808X							C1812X						

KEMET reserves the right to substitute product with an improved temperature characteristic, tighter capacitance tolerance and/or higher voltage capability within the same form factor (configuration and dimensions).

Table 1A – Capacitance Range/Selection Waterfall (0603 – 1812 Case Sizes) cont.

Cap	Cap Code	Case Size/ Series			C0603X			C0805X			C1206X					C1210X					C1808X							C1812X						
		Voltage Code			C	B	D	C	B	D	C	B	D	F	G	C	B	D	F	G	C	B	D	F	G	Z	H	C	B	D	F	G	Z	H
		Rated Voltage (VDC)			500	630	1000	500	630	1000	500	630	1000	1500	2000	500	630	1000	1500	2000	500	630	1000	1500	2000	2500	3000	500	630	1000	1500	2000	2500	3000
		Capacitance Tolerance			Product Availability and Chip Thickness Codes - See Table 2 for Chip Thickness Dimensions																													
15,000 pF	153	J	K	M				DG			EU	EJ	EJ			FL	FL	FL	FL		LA	LC	LC	LC				GB	GK	GK	GH			
18,000 pF	183	J	K	M				DG			EJ	EJ	EJ			FL	FL	FL	FM		LA	LE	LE					GB	GK	GK	GM			
22,000 pF	223	J	K	M				DG			EJ	EJ	EJ			FL	FM	FM	FM		LA	LE	LE					GB	GK	GK	GM			
27,000 pF	273	J	K	M							EJ	EJ				FM	FK	FK	FK		LA	LA	LA					GH	GB	GB	GO			
33,000 pF	333	J	K	M							EJ	EJ				FM	FZ	FU	FS		LC	LA	LA					GH	GB	GB	GO			
39,000 pF	393	J	K	M							EJ					FK	FZ	FU	FS		LC	LA	LA					GH	GB	GB				
47,000 pF	473	J	K	M							EJ					FK	FU	FK			LC	LA	LB					GH	GB	GC				
56,000 pF	563	J	K	M							EJ					FZ	FU	FK			LC	LA	LB					GH	GB	GE				
62,000 pF	623	J	K	M							EJ					FZ	FK	FS			LA	LA	LC					GK	GB	GE				
68,000 pF	683	J	K	M							EJ					FZ	FK	FS			LA	LA	LC					GE	GE	GE				
82,000 pF	823	J	K	M												FU	FK				LA	LC						GB	GE	GK				
0.10 µF	104	J	K	M												FK	FS				LA	LC						GB	GH	GJ				
0.12 µF	124	J	K	M												FK					LA							GE	GK					
0.15 µF	154	J	K	M												FK					LB							GE	GN					
0.18 µF	184	J	K	M																								GF						
0.22 µF	224	J	K	M																								GJ						
0.27 µF	274	J	K	M																								GL						
0.33 µF	334	J	K	M																								GS						
Cap	Cap Code	Rated Voltage (VDC)			500	630	1000	500	630	1000	500	630	1000	1500	2000	500	630	1000	1500	2000	500	630	1000	1500	2000	2500	3000	500	630	1000	1500	2000	2500	3000
		Voltage Code			C	B	D	C	B	D	C	B	D	F	G	C	B	D	F	G	C	B	D	F	G	Z	H	C	B	D	F	G	Z	H
		Case Size/ Series			C0603X			C0805X			C1206X					C1210X					C1808X							C1812X						

KEMET reserves the right to substitute product with an improved temperature characteristic, tighter capacitance tolerance and/or higher voltage capability within the same form factor (configuration and dimensions).

Table 1B – Capacitance Range/Selection Waterfall (1825 – 2225 Case Sizes)

Capacitance	Cap Code	Case Size/ Series			C1825X							C2220X							C2225X						
		Voltage Code			C	B	D	F	G	Z	H	C	B	D	F	G	Z	H	C	B	D	F	G	Z	H
		Rated Voltage (VDC)			500	630	1000	1500	2000	2500	3000	500	630	1000	1500	2000	2500	3000	500	630	1000	1500	2000	2500	3000
		Capacitance Tolerance			Product Availability and Chip Thickness Codes – See Table 2 for Chip Thickness Dimensions																				
470 pF	471	J	K	M	HG	HG	HG	HG	HG	HG	HG	JK	JK	JK	JK	JK	JK	JK							
560 pF	561	J	K	M	HG	HG	HG	HG	HG	HG	HG	JK	JK	JK	JK	JK	JK	JK							
680 pF	681	J	K	M	HG	HG	HG	HG	HG	HG	HG	JK	JK	JK	JK	JK	JK	JK	KF	KF	KF	KF	KF	KF	KF
820 pF	821	J	K	M	HG	HG	HG	HG	HG	HG	HG	JK	JK	JK	JK	JK	JK	JK	KF	KF	KF	KF	KF	KF	KF
1,000 pF	102	J	K	M	HG	HG	HG	HG	HG	HG	HG	JK	JK	JK	JK	JK	JK	JK	KF	KF	KF	KF	KF	KF	KF
1,200 pF	122	J	K	M	HG	HG	HG	HG	HG	HG	HG	JK	JK	JK	JK	JK	JK	JK	KF	KF	KF	KF	KF	KF	KF
1,500 pF	152	J	K	M	HG	HG	HG	HG	HG	HG	HG	JK	JK	JK	JK	JK	JK	JK	KF	KF	KF	KF	KF	KF	KF
1,800 pF	182	J	K	M	HE	HE	HE	HE	HE	HG	HG	JK	JK	JK	JK	JK	JK	JK	KF	KF	KF	KF	KF	KF	KF
2,200 pF	222	J	K	M	HE	HE	HE	HE	HE	HG	HG	JE	JE	JE	JE	JE	JK	JK	KF	KF	KF	KF	KF	KF	KF
2,700 pF	272	J	K	M	HE	HE	HE	HE	HE	HG	HG	JE	JE	JE	JE	JE	JK	JK	KE	KE	KE	KE	KE	KF	KE
3,300 pF	332	J	K	M	HE	HE	HE	HE	HE	HG	HG	JE	JE	JE	JE	JE	JK	JE	KE	KE	KE	KE	KE	KF	KE
3,900 pF	392	J	K	M	HE	HE	HE	HE	HE	HG		JE	JE	JE	JE	JE	JK	JE	KE	KE	KE	KE	KE	KF	KE
4,700 pF	472	J	K	M	HE	HE	HE	HE	HE	HG		JE	JE	JE	JE	JK	JE	JE	KE	KE	KE	KE	KE	KF	KE
5,600 pF	562	J	K	M	HE	HE	HE	HE	HE	HG		JE	JE	JE	JE	JK	JE	JE	KE	KE	KE	KE	KE	KF	KE
6,800 pF	682	J	K	M	HE	HE	HE	HE	HE	HJ		JE	JE	JE	JE	JK	JE	JE	KE	KE	KE	KE	KF	KE	KE
8,200 pF	822	J	K	M	HE	HE	HE	HE	HE	HJ		JE	JE	JE	JE	JK	JK	JK	KE	KE	KE	KE	KF	KF	KF
10,000 pF	103	J	K	M	HE	HE	HE	HE	HJ	HK		JE	JE	JE	JE	JL	JL	JL	KE	KE	KE	KE	KF	KH	KH
12,000 pF	123	J	K	M	HE	HE	HE	HG	HJ			JE	JK	JK	JK	JL	JL	JL	KE	KE	KE	KE	KF	KH	KH
15,000 pF	153	J	K	M	HE	HE	HE	HG	HK			JE	JK	JK	JK	JL	JN	JN	KE	KE	KE	KE	KF	KJ	KJ
18,000 pF	183	J	K	M	HE	HE	HE	HG				JE	JK	JK	JK	JN			KE	KE	KE	KE	KH		
22,000 pF	223	J	K	M	HE	HG	HG	HG				JE	JK	JK	JK	JN			KE	KF	KF	KF	KJ		
27,000 pF	273	J	K	M	HE	HG	HG	HG				JE	JK	JK	JK				KE	KF	KF	KF	KJ		
33,000 pF	333	J	K	M	HE	HG	HG	HE				JE	JK	JK	JK				KE	KF	KF	KF			
39,000 pF	393	J	K	M	HE	HG	HG	HG				JE	JK	JK	JE				KE	KF	KF	KF			
47,000 pF	473	J	K	M	HE	HG	HG	HJ				JE	JK	JK	JK				KE	KF	KF	KF			
56,000 pF	563	J	K	M	HE	HG	HG	HJ				JE	JE	JE	JL				KE	KF	KF	KF			
62,000 pF	623	J	K	M	HG	HG	HG	HK				JE	JE	JE	JL				KF	KF	KF	KH			
68,000 pF	683	J	K	M	HG	HJ	HJ	HK				JE	JK	JK	JL				KE	KF	KF	KJ			
82,000 pF	823	J	K	M	HG	HJ	HJ					JE	JL	JL	JN				KE	KF	KF	KJ			
0.10 µF	104	J	K	M	HG	HK	HK					JE	JN	JN					KE	KH	KH	KJ			
0.12 µF	124	J	K	M	HG	HE						JE	JN	JN					KE	KH	KH				
0.15 µF	154	J	K	M	HG	HE						JK	JE						KF	KJ	KJ				
0.18 µF	184	J	K	M	HG	HG						JK	JE						KF	KE					
0.22 µF	224	J	K	M	HG	HJ						JK	JK						KF	KF					
0.27 µF	274	J	K	M	HJ	HJ						JK	JL						KF	KH					
0.33 µF	334	J	K	M	HJ							JL	JN						KF	KH					
0.39 µF	394	J	K	M	HK							JN							KH	KJ					
0.47 µF	474	J	K	M								JN							KH	KJ					
0.56 µF	564	J	K	M															KJ						
Capacitance	Cap Code	Rated Voltage (VDC)			500	630	1000	1500	2000	2500	3000	500	630	1000	1500	2000	2500	3000	500	630	1000	1500	2000	2500	3000
		Voltage Code			C	B	D	F	G	Z	H	C	B	D	F	G	Z	H	C	B	D	F	G	Z	H
		Case Size/ Series			C1825X							C2220X							C2225X						

KEMET reserves the right to substitute product with an improved temperature characteristic, tighter capacitance tolerance and/or higher voltage capability within the same form factor (configuration and dimensions).

Table 2 – Chip Thickness/Tape & Reel Packaging Quantities

Thickness Code	Case Size[1]	Thickness ± Range (mm)	Paper Quantity		Plastic Quantity	
			7" Reel	13" Reel	7" Reel	13" Reel
CG	0603	0.80 ± 0.10*	4,000	15,000	0	0
DG	0805	1.25 ± 0.15	0	0	2,500	10,000
ES	1206	1.00 ± 0.20	0	0	2,500	10,000
EF	1206	1.20 ± 0.15	0	0	2,500	10,000
EU	1206	1.60 ± 0.25	0	0	2,000	8,000
EJ	1206	1.70 ± 0.20	0	0	2,000	8,000
FZ	1210	1.25 ± 0.20	0	0	2,500	10,000
FL	1210	1.40 ± 0.15	0	0	2,000	8,000
FU	1210	1.55 ± 0.20	0	0	2,000	8,000
FM	1210	1.70 ± 0.20	0	0	2,000	8,000
FK	1210	2.10 ± 0.20	0	0	2,000	8,000
FS	1210	2.50 ± 0.30	0	0	1,000	4,000
LE	1808	1.00 ± 0.10	0	0	2,500	10,000
LA	1808	1.40 ± 0.15	0	0	1,000	4,000
LB	1808	1.60 ± 0.15	0	0	1,000	4,000
LC	1808	2.00 ± 0.15	0	0	1,000	4,000
GB	1812	1.00 ± 0.10	0	0	1,000	4,000
GC	1812	1.10 ± 0.10	0	0	1,000	4,000
GE	1812	1.30 ± 0.10	0	0	1,000	4,000
GH	1812	1.40 ± 0.15	0	0	1,000	4,000
GF	1812	1.50 ± 0.10	0	0	1,000	4,000
GG	1812	1.55 ± 0.10	0	0	1,000	4,000
GK	1812	1.60 ± 0.20	0	0	1,000	4,000
GJ	1812	1.70 ± 0.15	0	0	1,000	4,000
GN	1812	1.70 ± 0.20	0	0	1,000	4,000
GL	1812	1.90 ± 0.20	0	0	500	2,000
GM	1812	2.00 ± 0.20	0	0	500	2,000
GS	1812	2.10 ± 0.20	0	0	500	2,000
GO	1812	2.50 ± 0.20	0	0	500	2,000
HE	1825	1.40 ± 0.15	0	0	1,000	4,000
HG	1825	1.60 ± 0.20	0	0	1,000	4,000
HJ	1825	2.00 ± 0.20	0	0	500	2,000
HK	1825	2.50 ± 0.20	0	0	500	2,000
JE	2220	1.40 ± 0.15	0	0	1,000	4,000
JK	2220	1.60 ± 0.20	0	0	1,000	4,000
JL	2220	2.00 ± 0.20	0	0	500	2,000
JN	2220	2.50 ± 0.20	0	0	500	2,000
KE	2225	1.40 ± 0.15	0	0	1,000	4,000
KF	2225	1.60 ± 0.20	0	0	1,000	4,000
KH	2225	2.00 ± 0.20	0	0	500	2,000
KJ	2225	2.50 ± 0.20	0	0	500	2,000
Thickness Code	**Case Size[1]**	**Thickness ± Range (mm)**	**7" Reel**	**13" Reel**	**7" Reel**	**13" Reel**
			Paper Quantity[1]		**Plastic Quantity**	

Package quantity based on finished chip thickness specifications.

Table 3 – Chip Capacitor Land Pattern Design Recommendations per IPC–7351

EIA Size Code	Metric Size Code	Density Level A: Maximum (Most) Land Protrusion (mm)					Density Level B: Median (Nominal) Land Protrusion (mm)					Density Level C: Minimum (Least) Land Protrusion (mm)				
		C	Y	X	V1	V2	C	Y	X	V1	V2	C	Y	X	V1	V2
0603	1608	0.85	1.25	1.10	4.00	2.10	0.75	1.05	1.00	3.10	1.50	0.65	0.85	0.90	2.40	1.20
0805	2012	0.99	1.44	1.66	4.47	2.71	0.89	1.24	1.56	3.57	2.11	0.79	1.04	1.46	2.42	1.81
1206	3216	1.59	1.62	2.06	5.85	3.06	1.49	1.42	1.96	4.95	2.46	1.39	1.22	1.86	4.25	2.16
1210	3225	1.59	1.62	3.01	5.90	4.01	1.49	1.42	2.91	4.95	3.41	1.39	1.22	2.81	4.25	3.11
1808	4520	2.30	1.75	2.30	7.40	3.30	2.20	1.55	2.20	6.50	2.70	2.10	1.35	2.10	5.80	2.40
1812	4532	2.10	1.80	3.60	7.00	4.60	2.00	1.60	3.50	6.10	4.00	1.90	1.40	3.40	5.40	3.70
1825	4564	2.15	1.80	6.90	7.10	7.90	2.05	1.60	6.80	6.20	7.30	1.95	1.40	6.70	5.50	7.00
2220	5650	2.85	2.10	5.50	8.80	6.50	2.75	1.90	5.40	7.90	5.90	2.65	1.70	5.30	7.20	5.60
2225	5664	2.85	2.10	6.90	8.80	7.90	2.75	1.90	6.80	7.90	7.30	2.65	1.70	6.70	7.20	7.00

Density Level A: *For low-density product applications. Recommended for wave solder applications and provides a wider process window for reflow solder processes. KEMET only recommends wave soldering of EIA 0603, 0805 and 1206 case sizes.*
Density Level B: *For products with a moderate level of component density. Provides a robust solder attachment condition for reflow solder processes.*
Density Level C: *For high component density product applications. Before adapting the minimum land pattern variations the user should perform qualification testing based on the conditions outlined in IPC Standard 7351 (IPC–7351).*

Image below based on Density Level B for an EIA 1210 case size.

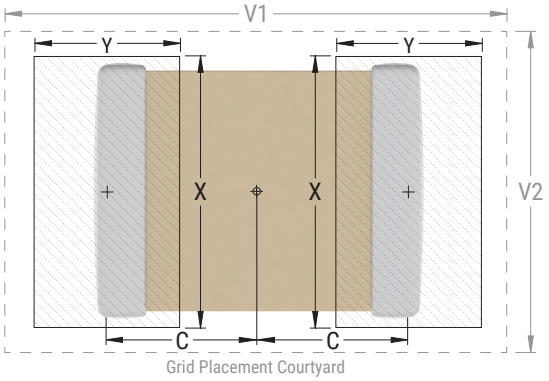

Soldering Process

Recommended Soldering Technique:

- Solder wave or solder reflow for EIA case sizes 0603, 0805 and 1206
- All other EIA case sizes are limited to solder reflow only

Recommended Reflow Soldering Profile:

KEMET's families of surface mount multilayer ceramic capacitors (SMD MLCCs) are compatible with wave (single or dual), convection, IR or vapor phase reflow techniques. Preheating of these components is recommended to avoid extreme thermal stress. KEMET's recommended profile conditions for convection and IR reflow reflect the profile conditions of the IPC/J-STD-020 standard for moisture sensitivity testing. These devices can safely withstand a maximum of three reflow passes at these conditions.

Profile Feature	Termination Finish	
	SnPb	100% Matte Sn
Preheat/Soak		
Temperature Minimum (T_{Smin})	100°C	150°C
Temperature Maximum (T_{Smax})	150°C	200°C
Time (t_S) from T_{Smin} to T_{Smax}	60 – 120 seconds	60 – 120 seconds
Ramp-Up Rate (T_L to T_P)	3°C/second maximum	3°C/second maximum
Liquidous Temperature (T_L)	183°C	217°C
Time Above Liquidous (t_L)	60 – 150 seconds	60 – 150 seconds
Peak Temperature (T_P)	235°C	260°C
Time Within 5°C of Maximum Peak Temperature (t_P)	20 seconds maximum	30 seconds maximum
Ramp-Down Rate (T_P to T_L)	6°C/second maximum	6°C/second maximum
Time 25°C to Peak Temperature	6 minutes maximum	8 minutes maximum

Note 1: All temperatures refer to the center of the package, measured on the capacitor body surface that is facing up during assembly reflow.

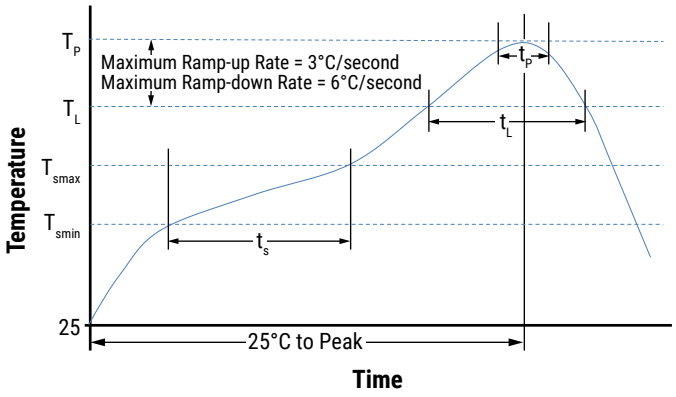

Storage and Handling

Ceramic chip capacitors should be stored in normal working environments. While the chips themselves are quite robust in other environments, solderability will be degraded by exposure to high temperatures, high humidity, corrosive atmospheres, and long term storage. In addition, packaging materials will be degraded by high temperature–reels may soften or warp and tape peel force may increase. KEMET recommends that maximum storage temperature not exceed 40ºC and maximum storage humidity not exceed 70% relative humidity. Temperature fluctuations should be minimized to avoid condensation on the parts and atmospheres should be free of chlorine and sulfur bearing compounds. For optimized solderability chip stock should be used promptly, preferably within 1.5 years of receipt.

Construction

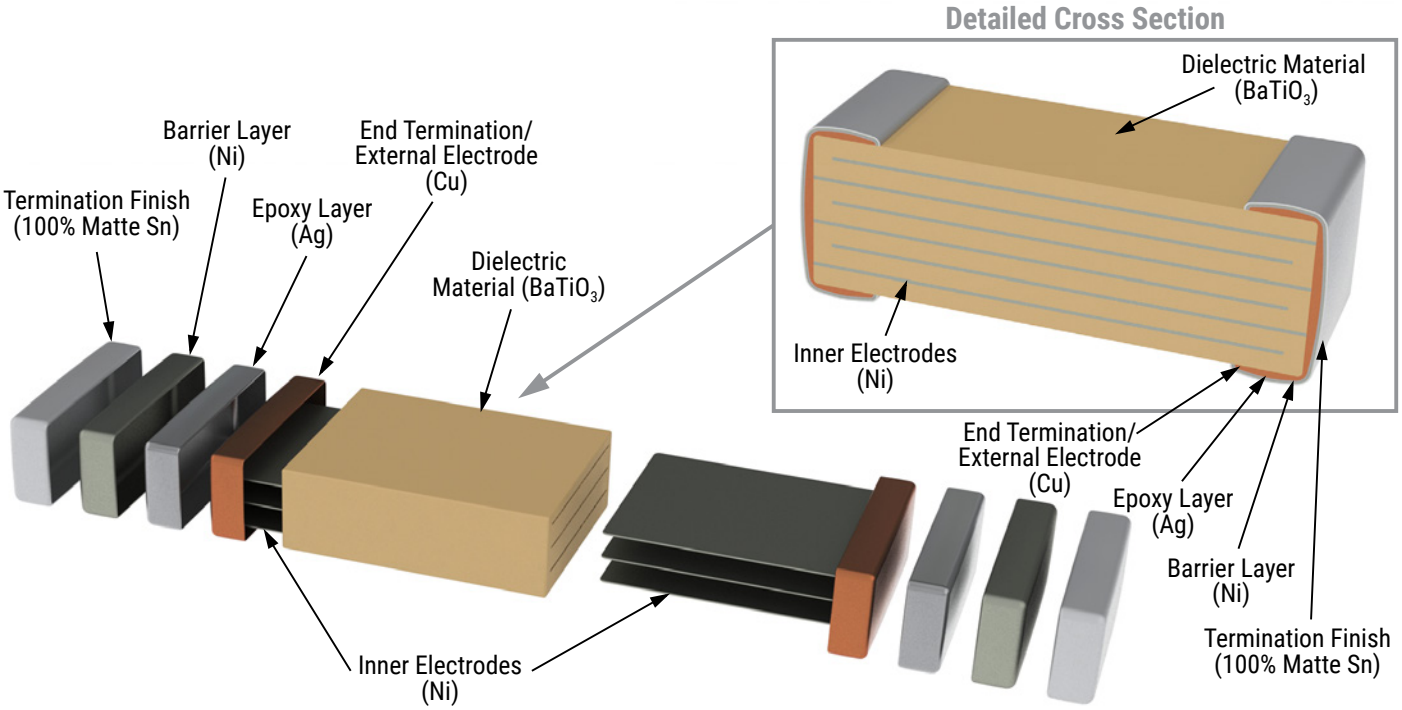

Capacitor Marking (Optional)

These surface mount multilayer ceramic capacitors are normally supplied unmarked. If required, they can be marked as an extra cost option. Marking is available on most KEMET devices, but must be requested using the correct ordering code identifier(s). If this option is requested, two sides of the ceramic body will be laser marked with a "K" to identify KEMET, followed by two characters (per EIA–198 - see table below) to identify the capacitance value. EIA 0603 case size devices are limited to the "K" character only.

Laser marking option is not available on:

- C0G, ultra stable X8R and Y5V dielectric devices.
- EIA 0402 case size devices.
- EIA 0603 case size devices with flexible termination option.
- KPS commercial and automotive grade stacked devices.
- X7R dielectric products in capacitance values outlined below.

EIA Case Size	Metric Size Code	Capacitance
0603	1608	≤ 170 pF
0805	2012	≤ 150 pF
1206	3216	≤ 910 pF
1210	3225	≤ 2,000 pF
1808	4520	≤ 3,900 pF
1812	4532	≤ 6,700 pF
1825	4564	≤ 0.018 µF
2220	5650	≤ 0.027 µF
2225	5664	≤ 0.033 µF

Marking appears in legible contrast. Illustrated below is an example of an MLCC with laser marking of "KA8", which designates a KEMET device with rated capacitance of 100 µF. Orientation of marking is vendor optional.

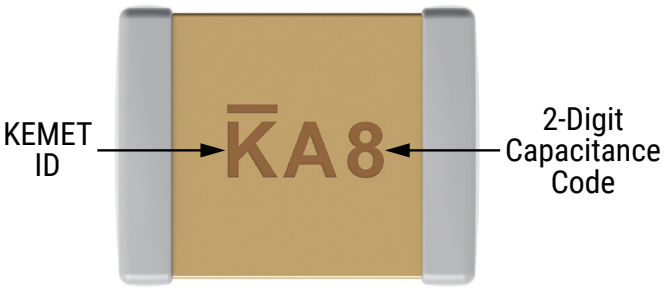

Capacitor Marking (Optional) cont.

Capacitance (pF) For Various Alpha/Numeral Identifiers										
Alpha Character	Numeral									
	9	0	1	2	3	4	5	6	7	8
	Capacitance (pF)									
A	0.10	1.0	10	100	1,000	10,000	100,000	1,000,000	10,000,000	100,000,000
B	0.11	1.1	11	110	1,100	11,000	110,000	1,100,000	11,000,000	110,000,000
C	0.12	1.2	12	120	1,200	12,000	120,000	1,200,000	12,000,000	120,000,000
D	0.13	1.3	13	130	1,300	13,000	130,000	1,300,000	13,000,000	130,000,000
E	0.15	1.5	15	150	1,500	15,000	150,000	1,500,000	15,000,000	150,000,000
F	0.16	1.6	16	160	1,600	16,000	160,000	1,600,000	16,000,000	160,000,000
G	0.18	1.8	18	180	1,800	18,000	180,000	1,800,000	18,000,000	180,000,000
H	0.20	2.0	20	200	2,000	20,000	200,000	2,000,000	20,000,000	200,000,000
J	0.22	2.2	22	220	2,200	22,000	220,000	2,200,000	22,000,000	220,000,000
K	0.24	2.4	24	240	2,400	24,000	240,000	2,400,000	24,000,000	240,000,000
L	0.27	2.7	27	270	2,700	27,000	270,000	2,700,000	27,000,000	270,000,000
M	0.30	3.0	30	300	3,000	30,000	300,000	3,000,000	30,000,000	300,000,000
N	0.33	3.3	33	330	3,300	33,000	330,000	3,300,000	33,000,000	330,000,000
P	0.36	3.6	36	360	3,600	36,000	360,000	3,600,000	36,000,000	360,000,000
Q	0.39	3.9	39	390	3,900	39,000	390,000	3,900,000	39,000,000	390,000,000
R	0.43	4.3	43	430	4,300	43,000	430,000	4,300,000	43,000,000	430,000,000
S	0.47	4.7	47	470	4,700	47,000	470,000	4,700,000	47,000,000	470,000,000
T	0.51	5.1	51	510	5,100	51,000	510,000	5,100,000	51,000,000	510,000,000
U	0.56	5.6	56	560	5,600	56,000	560,000	5,600,000	56,000,000	560,000,000
V	0.62	6.2	62	620	6,200	62,000	620,000	6,200,000	62,000,000	620,000,000
W	0.68	6.8	68	680	6,800	68,000	680,000	6,800,000	68,000,000	680,000,000
X	0.75	7.5	75	750	7,500	75,000	750,000	7,500,000	75,000,000	750,000,000
Y	0.82	8.2	82	820	8,200	82,000	820,000	8,200,000	82,000,000	820,000,000
Z	0.91	9.1	91	910	9,100	91,000	910,000	9,100,000	91,000,000	910,000,000
a	0.25	2.5	25	250	2,500	25,000	250,000	2,500,000	25,000,000	250,000,000
b	0.35	3.5	35	350	3,500	35,000	350,000	3,500,000	35,000,000	350,000,000
d	0.40	4.0	40	400	4,000	40,000	400,000	4,000,000	40,000,000	400,000,000
e	0.45	4.5	45	450	4,500	45,000	450,000	4,500,000	45,000,000	450,000,000
f	0.50	5.0	50	500	5,000	50,000	500,000	5,000,000	50,000,000	500,000,000
m	0.60	6.0	60	600	6,000	60,000	600,000	6,000,000	60,000,000	600,000,000
n	0.70	7.0	70	700	7,000	70,000	700,000	7,000,000	70,000,000	700,000,000
t	0.80	8.0	80	800	8,000	80,000	800,000	8,000,000	80,000,000	800,000,000
y	0.90	9.0	90	900	9,000	90,000	900,000	9,000,000	90,000,000	900,000,000

Tape & Reel Packaging Information

KEMET offers multilayer ceramic chip capacitors packaged in 8, 12 and 16 mm tape on 7" and 13" reels in accordance with EIA Standard 481. This packaging system is compatible with all tape-fed automatic pick and place systems. See Table 2 for details on reeling quantities for commercial chips.

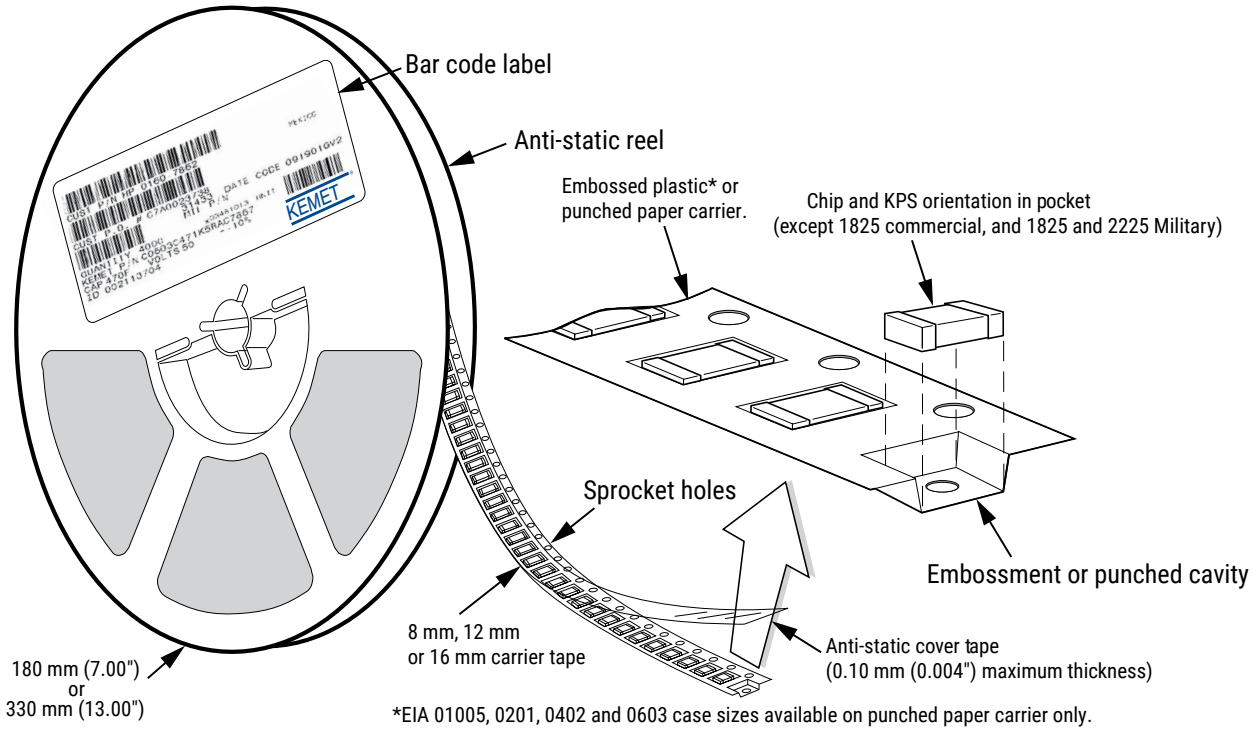

Table 5 – Carrier Tape Configuration, Embossed Plastic & Punched Paper (mm)

EIA Case Size	Tape Size (W)*	Embossed Plastic		Punched Paper	
		7" Reel	13" Reel	7" Reel	13" Reel
		Pitch (P_1)*		Pitch (P_1)*	
01005 – 0402	8			2	2
0603	8			4	4
0805	8	4	4	4	4
1206 – 1210	8	4	4	4	4
1805 – 1808	12	4	4		
≥ 1812	12	8	8		
KPS 1210	12	8	8		
KPS 1812 and 2220	16	12	12		
Array 0612	8	4	4		

**Refer to Figures 1 and 2 for W and P_1 carrier tape reference locations.*
**Refer to Tables 6 and 7 for tolerance specifications.*

Figure 1 – Embossed (Plastic) Carrier Tape Dimensions

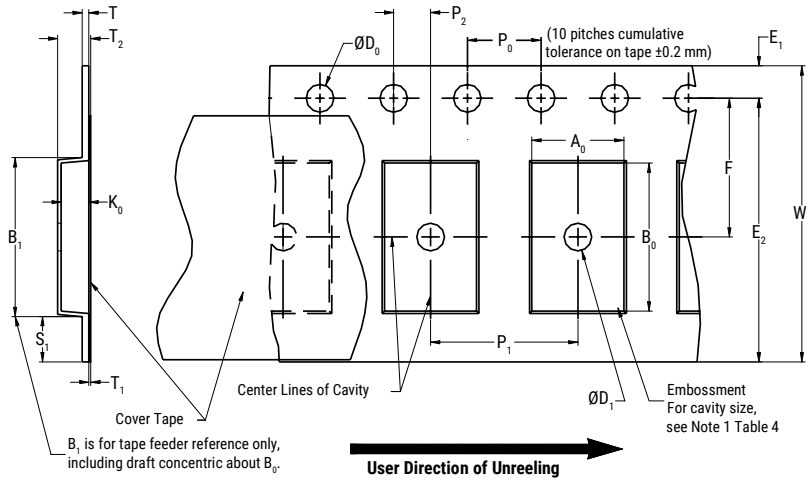

Table 6 – Embossed (Plastic) Carrier Tape Dimensions

Metric will govern

Constant Dimensions — Millimeters (Inches)									
Tape Size	D_0	D_1 Minimum Note 1	E_1	P_0	P_2	R Reference Note 2	S_1 Minimum Note 3	T Maximum	T_1 Maximum
8 mm	1.5 +0.10/−0.0 (0.059 +0.004/−0.0)	1.0 (0.039)	1.75 ±0.10 (0.069 ±0.004)	4.0 ±0.10 (0.157 ±0.004)	2.0 ±0.05 (0.079 ±0.002)	25.0 (0.984)	0.600 (0.024)	0.600 (0.024)	0.100 (0.004)
12 mm		1.5 (0.059)				30 (1.181)			
16 mm									

Variable Dimensions — Millimeters (Inches)								
Tape Size	Pitch	B_1 Maximum Note 4	E_2 Minimum	F	P_1	T_2 Maximum	W Maximum	A_0,B_0 & K_0
8 mm	Single (4 mm)	4.35 (0.171)	6.25 (0.246)	3.5 ±0.05 (0.138 ±0.002)	4.0 ±0.10 (0.157 ±0.004)	2.5 (0.098)	8.3 (0.327)	Note 5
12 mm	Single (4 mm) and double (8 mm)	8.2 (0.323)	10.25 (0.404)	5.5 ±0.05 (0.217 ±0.002)	8.0 ±0.10 (0.315 ±0.004)	4.6 (0.181)	12.3 (0.484)	
16 mm	Triple (12 mm)	12.1 (0.476)	14.25 (0.561)	7.5 ±0.05 (0.138 ±0.002)	12.0 ±0.10 (0.157 ±0.004)	4.6 (0.181)	16.3 (0.642)	

1. The embossment hole location shall be measured from the sprocket hole controlling the location of the embossment. Dimensions of the embossment location and the hole location shall be applied independently of each other.
2. The tape with or without components shall pass around R without damage (see Figure 6.)
3. If S_1 < 1.0 mm, there may not be enough area for a cover tape to be properly applied (see EIA Standard 481, paragraph 4.3, section b.)
4. B_1 dimension is a reference dimension for tape feeder clearance only.
5. The cavity defined by A_0, B_0 and K_0 shall surround the component with sufficient clearance that:
(a) the component does not protrude above the top surface of the carrier tape.
(b) the component can be removed from the cavity in a vertical direction without mechanical restriction, after the top cover tape has been removed.
(c) rotation of the component is limited to 20° maximum for 8 and 12 mm tapes and 10° maximum for 16 mm tapes (see Figure 3.)
(d) lateral movement of the component is restricted to 0.5 mm maximum for 8 and 12 mm wide tape and to 1.0 mm maximum for 16 mm tape (see Figure 4.)
(e) for KPS product, A_0 and B_0 are measured on a plane 0.3 mm above the bottom of the pocket.
(f) see addendum in EIA Standard 481 for standards relating to more precise taping requirements.

Figure 2 – Punched (Paper) Carrier Tape Dimensions

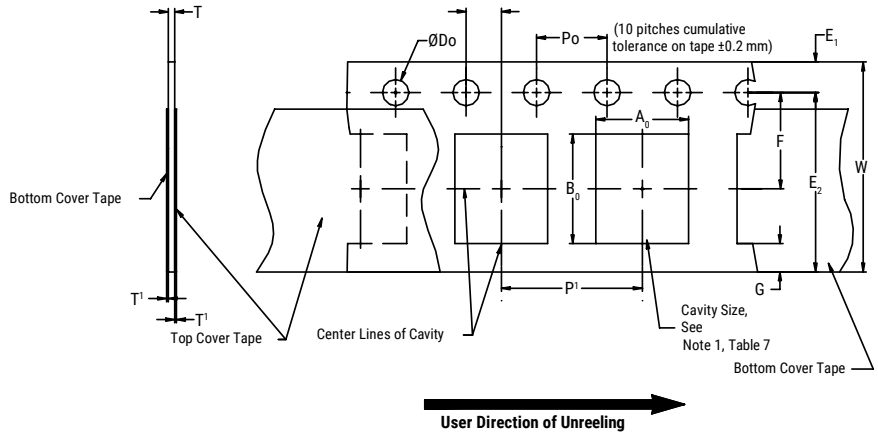

Table 7 – Punched (Paper) Carrier Tape Dimensions

Metric will govern

Constant Dimensions — Millimeters (Inches)							
Tape Size	D_0	E_1	P_0	P_2	T_1 Maximum	G Minimum	R Reference Note 2
8 mm	1.5 +0.10 -0.0 (0.059 +0.004 -0.0)	1.75 ±0.10 (0.069 ±0.004)	4.0 ±0.10 (0.157 ±0.004)	2.0 ±0.05 (0.079 ±0.002)	0.10 (0.004) maximum	0.75 (0.030)	25 (0.984)
Variable Dimensions — Millimeters (Inches)							
Tape Size	Pitch	E2 Minimum	F	P_1	T Maximum	W Maximum	A_0 B_0
8 mm	Single (4 mm)	6.25 (0.246)	3.5 ±0.05 (0.138 ±0.002)	4.0 ±0.10 (0.157 ±0.004)	1.1 (0.043)	8.3 (0.327)	Note 1

1. The cavity defined by A_0, B_0 and T shall surround the component with sufficient clearance that:

a) the component does not protrude beyond either surface of the carrier tape.

b) the component can be removed from the cavity in a vertical direction without mechanical restriction, after the top cover tape has been removed.

c) rotation of the component is limited to 20° maximum (see Figure 3.)

d) lateral movement of the component is restricted to 0.5 mm maximum (see Figure 4.)

e) see addendum in EIA Standard 481 for standards relating to more precise taping requirements.

2. The tape with or without components shall pass around R without damage (see Figure 6.)

Packaging Information Performance Notes

1. Cover Tape Break Force: 1.0 kg minimum.
2. Cover Tape Peel Strength: The total peel strength of the cover tape from the carrier tape shall be:

Tape Width	Peel Strength
8 mm	0.1 to 1.0 newton (10 to 100 gf)
12 and 16 mm	0.1 to 1.3 newton (10 to 130 gf)

The direction of the pull shall be opposite the direction of the carrier tape travel. The pull angle of the carrier tape shall be 165° to 180° from the plane of the carrier tape. During peeling, the carrier and/or cover tape shall be pulled at a velocity of 300 ±10 mm/minute.
3. Labeling: Bar code labeling (standard or custom) shall be on the side of the reel opposite the sprocket holes. *Refer to EIA Standards 556 and 624*.

Figure 3 – Maximum Component Rotation

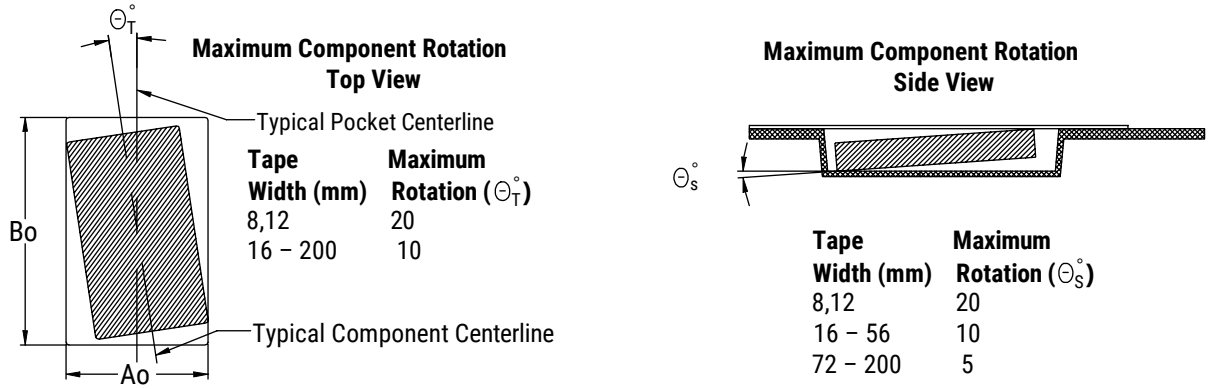

Figure 4 – Maximum Lateral Movement

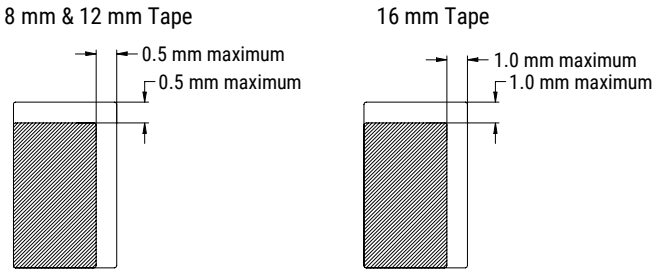

Figure 5 – Bending Radius

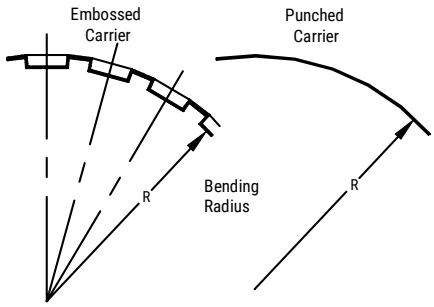

Figure 6 – Reel Dimensions

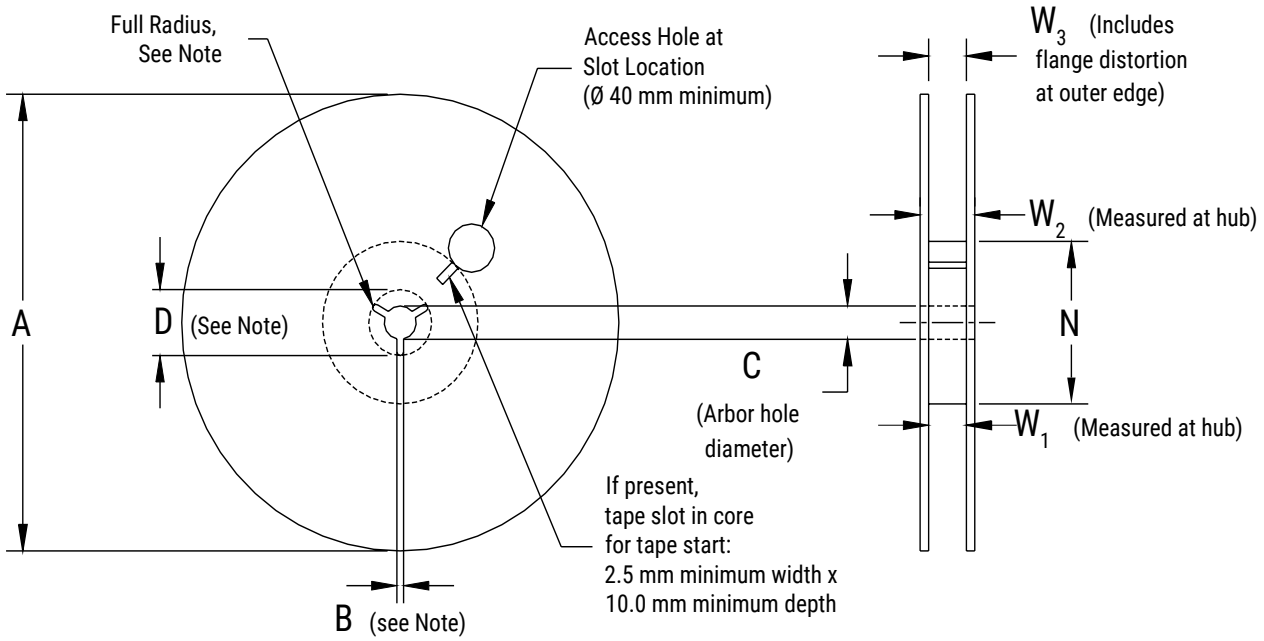

Note: Drive spokes optional; if used, dimensions B and D shall apply.

Table 8 – Reel Dimensions

Metric will govern

Constant Dimensions — Millimeters (Inches)				
Tape Size	A	B Minimum	C	D Minimum
8 mm	178 ±0.20 (7.008 ±0.008) or 330 ±0.20 (13.000 ±0.008)	1.5 (0.059)	13.0 +0.5/−0.2 (0.521 +0.02/−0.008)	20.2 (0.795)
12 mm				
16 mm				

Variable Dimensions — Millimeters (Inches)				
Tape Size	N Minimum	W_1	W_2 Maximum	W_3
8 mm	50 (1.969)	8.4 +1.5/−0.0 (0.331 +0.059/−0.0)	14.4 (0.567)	Shall accommodate tape width without interference
12 mm		12.4 +2.0/−0.0 (0.488 +0.078/−0.0)	18.4 (0.724)	
16 mm		16.4 +2.0/−0.0 (0.646 +0.078/−0.0)	22.4 (0.882)	

Figure 7 – Tape Leader & Trailer Dimensions

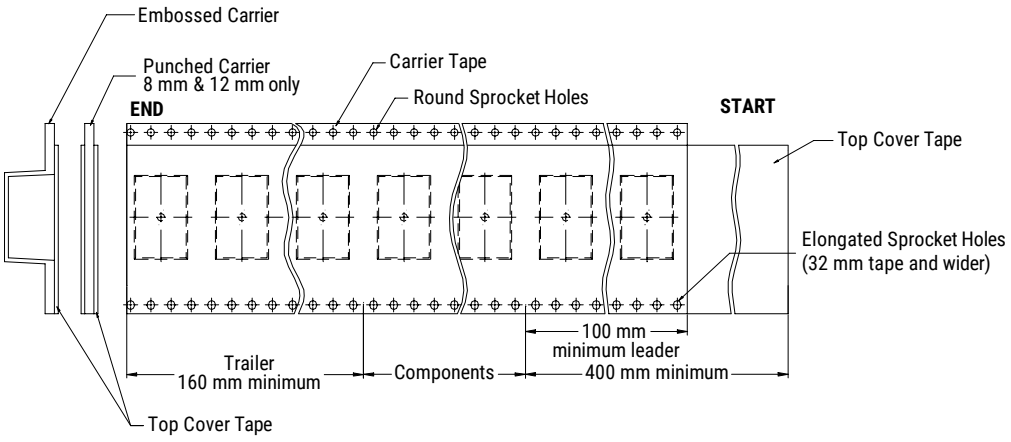

Figure 8 – Maximum Camber

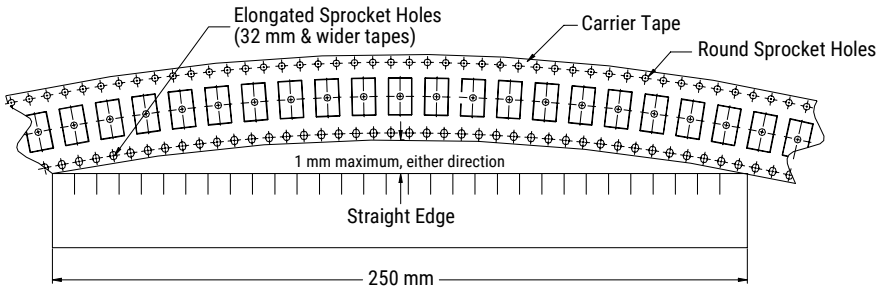

Application Guide

Solder Fluxes and Cleaning

The use of water-soluble fluxes provides advantages of excellent solderability due to high activation. However, these fluxes contain organic acids that can induce arcing under high DC or AC voltages. Notable problem areas are underneath the MLCC where flux can be trapped between the ceramic material and PCB. It is therefore critical that PCBs are properly cleaned to remove all flux residue to maintain reliability.

Coating for High Voltage MLCCs

For MLCC ratings ≥1500V, it is recommended to apply a conformal coating to MLCC to prevent surface arcing. To reduce possibility of inducing cracks in the MLCC, select a coating with thermal expansions close to that of the MLCC.

Dielectric	CTE (ppm/°C)
Class II $BaTiO_3$	10.7
Class I $CaZrO_3$	9.8

Slits in PCB

It is recommended to apply a slit in the PCB under the MLCC to improve washing of flux residue that may get trapped underneath. In some cases, it is not possible to slit entirely through the PCB due to underlying metal planes. It is also acceptable to apply a recessed slit under the MLCC which will also promote cleaning.

- Recommended for case sizes ≥1206
- The width (w) of the slit should be 1mm
- Length of the slit should be as short as possible to prevent damaging the MLCC due to mechanical stress of the PCB.
- Slits also reduce the risk of solder balls under MLCC which decreased the creepage distance.

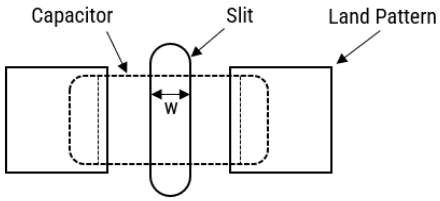

Solder Resist

If a slit cannot be applied as above, it is recommended to not use solder resist directly under the MLCC. The use of solder resist material reduces the distance between MLCC ceramic material and PCB thus making it difficult to clean.

Solder Balls

Improper reflow techniques and/or improper washing can induce solder balls under or adjacent to the MLCC. Solder balls reduce the creepage distance between the MLCC terminations and increase the risk of arcing or damage to the ceramic material. To reduce the risk of solder balls:

- Follow KEMET's solder recommendations as outlined in the datasheet.
- If performing a cleaning procedure, properly clean the PCB per KEMET's cleaning recommendations.
- Add slit to the PCB as shown above.

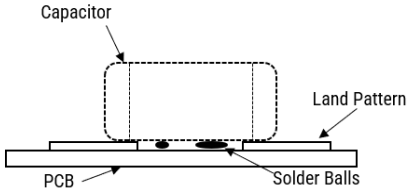

KEMET Electronics Corporation Sales Offices

For a complete list of our global sales offices, please visit www.kemet.com/sales.

Disclaimer

YAGEO Corporation and its affiliates do not recommend the use of commercial or automotive grade products for high reliability applications or manned space flight.

All product specifications, statements, information and data (collectively, the "Information") in this datasheet are subject to change. The customer is responsible for checking and verifying the extent to which the Information contained in this publication is applicable to an order at the time the order is placed. All Information given herein is believed to be accurate and reliable, but it is presented without guarantee, warranty, or responsibility of any kind, expressed or implied.

Statements of suitability for certain applications are based on KEMET Electronics Corporation's ("KEMET") knowledge of typical operating conditions for such applications, but are not intended to constitute – and KEMET specifically disclaims – any warranty concerning suitability for a specific customer application or use. The Information is intended for use only by customers who have the requisite experience and capability to determine the correct products for their application. Any technical advice inferred from this Information or otherwise provided by KEMET with reference to the use of KEMET's products is given gratis, and KEMET assumes no obligation or liability for the advice given or results obtained.

Although KEMET designs and manufactures its products to the most stringent quality and safety standards, given the current state of the art, isolated component failures may still occur. Accordingly, customer applications which require a high degree of reliability or safety should employ suitable designs or other safeguards (such as installation of protective circuitry or redundancies) in order to ensure that the failure of an electrical component does not result in a risk of personal injury or property damage.

Although all product–related warnings, cautions and notes must be observed, the customer should not assume that all safety measures are indicated or that other measures may not be required.

KEMET is a registered trademark of KEMET Electronics Corporation.