C0G Dielectric, 10 – 250 VDC (Automotive Grade)

Overview

KEMET's Automotive Grade Series surface mount capacitors in C0G dielectric are suited for a variety of applications requiring proven, reliable performance in harsh environments. Whether under-hood or in-cabin, these devices emphasize the vital and robust nature of capacitors required for mission and safety critical automotive circuits. Stricter testing protocol and inspection criteria have been established for automotive grade products in recognition of potentially harsh environmental conditions. KEMET automotive grade series capacitors meet the demanding Automotive Electronics Council's AEC–Q200 qualification requirements.

C0G dielectric features a 125°C maximum operating temperature and is considered "stable." The Electronics Industries Alliance (EIA) characterizes C0G dielectric as a Class I material. Components of this classification are temperature compensating and are suited for resonant circuit applications or those where Q and stability of capacitance characteristics are required. C0G exhibits no change in capacitance with respect to time and voltage and boasts a negligible change in capacitance with reference to ambient temperature. Capacitance change is limited to ±30 ppm/ºC from −55°C to +125°C.

Benefits

- AEC–Q200 automotive qualified
- −55°C to +125°C operating temperature range
- Lead (Pb)-Free, RoHS and REACH compliant
- EIA 0402, 0603, 0805, 1206, 1210, 1812, and 2220 case sizes
- DC voltage ratings of 10 V, 16 V, 25 V, 50 V, 100 V, 200 V, and 250 V
- Capacitance offerings ranging from 0.5 pF up to 0.47 µF
- Available capacitance tolerances of ±0.10 pF, ±0.25 pF, ±0.5 pF, ±1%, ±2%, ±5%, ±10%, and ±20%

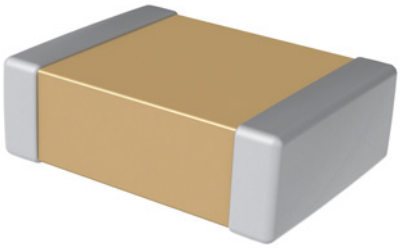

Ordering Information

C	1206	C	104	J	3	G	A	C	AUTO
Ceramic	Case Size (L" x W")	Specification/ Series	Capacitance Code (pF)	Capacitance Tolerance[1]	Rated Voltage (VDC)	Dielectric	Failure Rate/ Design	Termination Finish[2]	Packaging/Grade (C-Spec)
	0402 0603 0805 1206 1210 1812 2220	C = Standard	Two significant digits and number of zeros Use 9 for 1.0 – 9.9 pF Use 8 for 0.5 – .99 pF ex. 2.2 pF = 229 ex. 0.5 pF = 508	B = ±0.10 pF C = ±0.25 pF D = ±0.5 pF F = ±1% G = ±2% J = ±5% K = ±10% M = ±20%	8 = 10 4 = 16 3 = 25 5 = 50 1 = 100 2 = 200 A = 250	G = C0G	A = N/A	C = 100% Matte Sn	See "Packaging C-Spec Ordering Options Table"

[1] *Additional capacitance tolerance offerings may be available. Contact KEMET for details.*

[2] *Additional termination finish options may be available. Contact KEMET for details.*

© KEMET Electronics Corporation • One East Broward Boulevard
Fort Lauderdale, FL 33301 USA • 954-766-2800 • www.kemet.com

Packaging C-Spec Ordering Options Table

Packaging Type[1]	Packaging/Grade Ordering Code (C-Spec)[2]
7" Reel	AUTO
13" Reel/Unmarked	AUTO7411 (EIA 0603 and smaller case sizes) AUTO7210 (EIA 0805 and larger case sizes)

[1] Reeling tape options (Paper or Plastic) are dependent on capacitor case size (L" x W") and thickness dimension. See "Chip Thickness/Tape & Reel Packaging Quantities" and "Tape & Reel Packaging Information".

[2] All Automotive packaging C-Specs listed exclude the option to laser mark components. Please contact KEMET if you require a laser marked option. For more information see "Capacitor Marking".

[2] For additional Information regarding "AUTO" C-Spec options, see "Automotive C-Spec Information".

Benefits cont.

- No piezoelectric noise
- Extremely low ESR and ESL
- High thermal stability
- High ripple current capability
- Preferred capacitance solution at line frequencies and into the MHz range
- No capacitance change with respect to applied rated DC voltage
- Negligible capacitance change with respect to temperature from −55°C to +125°C
- No capacitance decay with time
- Non-polar device, minimizing installation concerns
- 100% pure matte tin-plated termination finish allowing for excellent solderability

Applications

Typical applications include critical timing, tuning, circuits requiring low loss, circuits with pulse, high current, decoupling, bypass, filtering, transient voltage suppression, blocking and energy storage.

Automotive C-Spec Information

KEMET automotive grade products meet or exceed the requirements outlined by the Automotive Electronics Council. Details regarding test methods and conditions are referenced in document AEC–Q200, Stress Test Qualification for Passive Components. These products are supported by a Product Change Notification (PCN) and Production Part Approval Process warrant (PPAP).

Automotive products offered through our distribution channel have been assigned an inclusive ordering code C-Spec, "AUTO." This C-Spec was developed in order to better serve small and medium-sized companies that prefer an automotive grade component without the requirement to submit a customer Source Controlled Drawing (SCD) or specification for review by a KEMET engineering specialist. This C-Spec is therefore not intended for use by KEMET OEM automotive customers and are not granted the same "privileges" as other automotive C-Specs. Customer PCN approval and PPAP request levels are limited (see details below.)

Product Change Notification (PCN)

The KEMET product change notification system is used to communicate primarily the following types of changes:

- Product/process changes that affect product form, fit, function, and/or reliability
- Changes in manufacturing site
- Product obsolescence

KEMET Automotive C-Spec	Customer Notification Due To:		Days Prior To Implementation
	Process/Product change	Obsolescence*	
KEMET assigned[1]	Yes (with approval and sign off)	Yes	180 days minimum
AUTO	Yes (without approval)	Yes	90 days minimum

[1] *KEMET assigned C-Specs require the submittal of a customer SCD or customer specification for review. For additional information contact KEMET.*

Production Part Approval Process (PPAP)

The purpose of the Production Part Approval Process is:

- To ensure that supplier can meet the manufacturability and quality requirements for the purchased parts.
- To provide the evidence that all customer engineering design records and specification requirements are properly understood and fulfilled by the manufacturing organization.
- To demonstrate that the established manufacturing process has the potential to produce the part.

KEMET Automotive C-Spec	PPAP Level				
	1	2	3	4	5
KEMET assigned[1]	●	●	●	●	●
AUTO			○		

[1] *KEMET assigned C-Specs require the submittal of a customer SCD or customer specification for review. For additional information contact KEMET.*

● Part number specific PPAP available with customer information included.
○ Product family PPAP only

Dimensions – Millimeters (Inches)

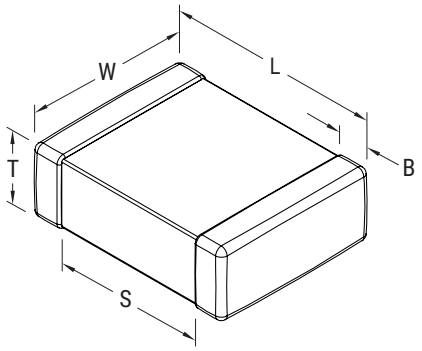

EIA Size Code	Metric Size Code	L Length	W Width	T Thickness	B Bandwidth	S Separation Minimum	Mounting Technique
0402	1005	1.00 (0.040) ±0.05 (0.002)	0.50 (0.020) ±0.05 (0.002)	See Table 2 for Thickness	0.30 (0.012) ±0.10 (0.004)	0.30 (0.012)	Solder Reflow Only
0603	1608	1.60 (0.063) ±0.15 (0.006)	0.80 (0.032) ±0.15 (0.006)		0.35 (0.014) ±0.15 (0.006)	0.50 (0.020)	Solder Wave or Solder Reflow
0805	2012	2.00 (0.079) ±0.20 (0.008)	1.25 (0.049) ±0.20 (0.008)		0.50 (0.02) ±0.25 (0.010)	0.70 (0.028)	
1206	3216	3.20 (0.126) ±0.20 (0.008)	1.60 (0.063) ±0.20 (0.008)		0.50 (0.02) ±0.25 (0.010)	1.50 (0.060)	
1210	3225	3.20 (0.126) ±0.20 (.008)	2.50 (0.098) ±0.20 (0.008)		0.50 (0.02) ±0.25 (0.010)	1.50 (0.060)	Solder Reflow Only
1812	4532	4.50 (0.177) ±0.30 (0.012)	3.20 (0.126) ±0.30 (0.012)		0.60 (0.024) ±0.35 (0.014)	2.30 (0.091)	
2220	5650	5.70 (0.224) ±0.40 (0.016)	5.00 (0.197) ±0.40 (0.016)		0.60 (0.024) ±0.35 (0.014)	3.50 (0.138)	

Qualification/Certification

Automotive Grade products meet or exceed the requirements outlined by the Automotive Electronics Council. Details regarding test methods and conditions are referenced in document AEC–Q200, Stress Test Qualification for Passive Components. For additional information regarding the Automotive Electronics Council and AEC–Q200, please visit their website @www.aecouncil.com.

Environmental Compliance

Lead (Pb)-free, RoHS, and REACH compliant without exemptions.

Electrical Parameters/Characteristics

Item	Parameters/Characteristics
Operating Temperature Range	−55°C to +125°C
Capacitance Change with Reference to +25°C and 0 VDC Applied (TCC)	±30 ppm/°C
Aging Rate (Maximum % Capacitance Loss/Decade Hour)	0%
[1]Dielectric Withstanding Voltage (DWV)	250% of rated voltage (5±1 seconds and charge/discharge not exceeding 50 mA)
[2]Dissipation Factor (DF) Maximum Limit at 25°C	0.1%
[3]Insulation Resistance (IR) Limit at 25°C	1,000 megohm microfarads or 100 GΩ (Rated voltage applied for 120±5 seconds at 25°C)

[1] DWV is the voltage a capacitor can withstand (survive) for a short period of time. It exceeds the nominal and continuous working voltage of the capacitor.
[2] Capacitance and dissipation factor (DF) measured under the following conditions:
1 MHz ±100 kHz and 1.0 Vrms ±0.2 V if capacitance ≤ 1,000 pF
1 kHz ±50 Hz and 1.0 Vrms ±0.2 V if capacitance > 1,000 pF
[3] To obtain IR limit, divide MΩ-µF value by the capacitance and compare to GΩ limit. Select the lower of the two limits.
Capacitance and Dissipation Factor (DF) measured under the following conditions:
Note: When measuring capacitance it is important to ensure the set voltage level is held constant. The HP4284 and Agilent E4980 have a feature known as Automatic Level Control (ALC). The ALC feature should be switched to "ON."

Post Environmental Limits

High Temperature Life, Biased Humidity, Moisture Resistance					
Dielectric	Rated DC Voltage	Capacitance Value	Dissipation Factor (Maximum %)	Capacitance Shift	Insulation Resistance
C0G	All	All	0.5	0.3% or ±0.25 pF	10% of Initial Limit

Table 1A – Capacitance Range/Selection Waterfall (0402 – 0805 Case Sizes)

Capacitance	Cap Code	Case Size/Series								C0402C							C0603C							C0805C						
		Voltage Code								8	4	3	5	1	2	A	8	4	3	5	1	2	A	8	4	3	5	1	2	A
		Rated Voltage (VDC)								10	16	25	50	100	200	250	10	16	25	50	100	200	250	10	16	25	50	100	200	250
		Capacitance Tolerance								Product Availability and Chip Thickness Codes See Table 2 for Chip Thickness Dimensions																				
0.50 & 0.75 pF	508 & 758	B	C	D						BB	BB	BB	BB				CF	CF	CF	CF	CF	CF	CF	DN	DN	DN	DN	DN	DN	DN
1.0 – 9.1 pF*	109 – 919*	B	C	D						BB	BB	BB	BB				CF	CF	CF	CF	CF	CF	CF	DN	DN	DN	DN	DN	DN	DN
10 – 91 pF*	100 – 910*				F	G	J	K	M	BB	BB	BB	BB				CF	CF	CF	CF	CF	CF	CF	DN	DN	DN	DN	DN	DN	DN
100 pF	101				F	G	J	K	M	BB	BB	BB	BB	BB	BB	BB	CF	CF	CF	CF	CF	CF	CF	DN	DN	DN	DN	DN	DN	DN
110 – 180 pF*	111 – 181*				F	G	J	K	M	BB	BB	BB	BB	BB	BB	BB	CF	CF	CF	CF	CF	CF	CF	DN	DN	DN	DN	DN	DN	DN
200 – 270 pF*	201 – 271*				F	G	J	K	M	BB	BB	BB	BB	BB	BB	BB	CF	CF	CF	CF	CF	CF	CF	DN	DN	DN	DN	DN	DN	DN
300 pF	301				F	G	J	K	M	BB	BB	BB	BB	BB	BD	BD	CF	CF	CF	CF	CF	CF	CF	DN	DN	DN	DN	DN	DN	DN
330 pF	331				F	G	J	K	M	BB	BB	BB	BB	BB	BD	BD	CF	CF	CF	CF	CF	CF	CF	DN	DN	DN	DN	DN	DN	DN
360 pF	361				F	G	J	K	M	BB	BB	BB	BB	BB			CF	CF	CF	CF	CF	CF	CF	DN	DN	DN	DN	DN	DN	DN
390 pF	391				F	G	J	K	M	BB	BB	BB	BB	BB			CF	CF	CF	CF	CF	CF	CF	DN	DN	DN	DN	DN	DN	DN
430 pF	431				F	G	J	K	M	BB	BB	BB	BB	BB			CF	CF	CF	CF	CF	CF	CF	DN	DN	DN	DN	DN	DN	DN
470 pF	471				F	G	J	K	M	BB	BB	BB	BB	BB			CF	CF	CF	CF	CF	CF	CF	DN	DN	DN	DN	DN	DP	DP
510 – 820 pF*	511 – 821*				F	G	J	K	M	BB	BB	BB	BB	BB			CF	CF	CF	CF	CF	CF	CF	DN	DN	DN	DN	DN	DN	DN
910 pF	911				F	G	J	K	M	BB	BB	BB	BB	BB			CF	CF	CF	CF	CF	CF	CF	DN	DN	DN	DN	DP	DP	DP
1,000 pF	102				F	G	J	K	M	BB	BB	BB	BB	BB			CF	CF	CF	CF	CF	CF	CF	DN	DN	DN	DN	DP	DP	DP
1,100 pF	112				F	G	J	K	M	BB	BB	BB	BB				CF	CF	CF	CF	CF	CH	CH	DN	DN	DN	DN	DN	DN	DN
1,200 pF	122				F	G	J	K	M	BB	BB	BB	BB				CF	CF	CF	CF	CF	CH	CH	DN	DN	DN	DN	DN	DN	DN
1,300 pF	132				F	G	J	K	M	BB	BB	BB	BB				CF	CF	CF	CF	CF	CH	CH	DP	DP	DP	DP	DP	DN	DN
1,500 pF	152				F	G	J	K	M	BB	BB	BB	BB				CF	CF	CF	CF	CF	CH	CH	DP	DP	DP	DP	DP	DN	DN
1,600 pF	162				F	G	J	K	M	BB	BB	BB					CF	CF	CF	CF	CF	CH	CH	DP	DP	DP	DP	DP	DN	DN
1,800 pF	182				F	G	J	K	M	BB	BB	BB					CF	CF	CF	CF	CF	CH	CH	DP	DP	DP	DP	DP	DN	DN
2,000 pF	202				F	G	J	K	M	BB	BB	BB					CF	CF	CF	CF	CF	CH	CH	DN	DN	DN	DN	DN	DN	DN
2,200 pF	222				F	G	J	K	M	BB	BB	BB					CF	CF	CF	CF	CF	CH	CH	DN	DN	DN	DN	DN	DN	DN
2,400 pF	242				F	G	J	K	M								CF	CF	CF	CF	CF			DN	DN	DN	DN	DN	DN	DN
2,700 pF	272				F	G	J	K	M								CF	CF	CF	CF	CF			DN	DN	DN	DN	DN	DN	DN
3,000 pF	302				F	G	J	K	M								CF	CF	CF	CF	CF			DN	DN	DN	DN	DN	DN	DN
3,300 pF	332				F	G	J	K	M								CF	CF	CF	CF	CF			DN	DN	DN	DN	DN	DN	DN
3,600 pF	362				F	G	J	K	M								CF	CF	CF	CF	CF			DN	DN	DN	DN	DN	DP	DP
3,900 pF	392				F	G	J	K	M								CF	CF	CF	CF	CF			DN	DN	DN	DN	DN	DP	DP
4,300 pF	432				F	G	J	K	M								CF	CF	CF	CF	CF			DN	DN	DN	DN	DN	DP	DP
4,700 pF	472				F	G	J	K	M								CF	CF	CF	CF	CF			DN	DN	DN	DN	DN	DP	DP
5,100 pF	512				F	G	J	K	M								CF	CF	CF	CF				DN	DN	DN	DN	DN	DP	DP
5,600 pF	562				F	G	J	K	M								CF	CF	CF	CF				DN	DN	DN	DN	DN	DP	DP
6,200 pF	622				F	G	J	K	M								CF	CF	CF	CF				DN	DN	DN	DN	DN	DG	DG
6,800 pF	682				F	G	J	K	M								CF	CF	CF	CF				DN	DN	DN	DN	DN	DG	DG
7,500 pF	752				F	G	J	K	M								CF	CF	CF					DN	DN	DN	DN	DN	DG	DG
8,200 pF	822				F	G	J	K	M								CF	CF	CF					DN	DN	DN	DN	DN	DG	DG
9,100 pF	912				F	G	J	K	M								CF	CF	CF					DN	DN	DN	DN	DN		
10,000 pF	103				F	G	J	K	M								CF	CF	CF					DN	DN	DN	DN	DP		
12,000 pF	123				F	G	J	K	M								CF	CF	CF					DN	DN	DN	DN	DE		
15,000 pF	153				F	G	J	K	M								CF	CF	CF					DN	DN	DN	DP	DG		
18,000 pF	183				F	G	J	K	M															DN	DN	DN	DP			
22,000 pF	223				F	G	J	K	M															DP	DP	DP	DF			
27,000 pF	273				F	G	J	K	M															DF	DF	DF				
33,000 pF	333				F	G	J	K	M															DG	DG	DG				
39,000 pF	393				F	G	J	K	M															DG	DG	DG				
47,000 pF	473				F	G	J	K	M															DG	DG	DG				
Capacitance	Cap Code	Rated Voltage (VDC)								10	16	25	50	100	200	250	10	16	25	50	100	200	250	10	16	25	50	100	200	250
		Voltage Code								8	4	3	5	1	2	A	8	4	3	5	1	2	A	8	4	3	5	1	2	A
		Case Size/Series								C0402C							C0603C							C0805C						

**Capacitance range Includes E24 decade values only. (i.e., 10, 11, 12, 13, 15, 16, 18, 20, 22, 24, 27, 30, 33, 36, 39, 43, 47, 51, 56, 62, 68, 75, 82, and 91)*
KEMET reserves the right to substitute product with an improved temperature characteristic, tighter capacitance tolerance and/or higher voltage capability within the same form factor (configuration and dimensions).
These products are protected under US Patents 7,172,985 & 7,670,981, other patents pending, and any foreign counterparts.

Table 1B – Capacitance Range/Selection Waterfall (1206 – 2220 Case Sizes)

Cap	Cap Code	Case Size/Series									C1206C							C1210C							C1812C				C2220C		
		Voltage Code									8	4	3	5	1	2	A	8	4	3	5	1	2	A	5	1	2	A	5	1	2
		Rated Voltage (VDC)									10	16	25	50	100	200	250	10	16	25	50	100	200	250	50	100	200	250	50	100	200
		Capacitance Tolerance									Product Availability and Chip Thickness Codes See Table 2 for Chip Thickness Dimensions																				
1.0 – 9.1 pF*	109 – 919*	B	C	D							EB	EB	EB	EB	EB	EB	EB	FB	FB	FB	FB	FB	FB	FB							
10 – 91 pF*	100 – 910*				F	G	J	K	M		EB	EB	EB	EB	EB	EB	EB	FB	FB	FB	FB	FB	FB	FB							
100 – 430 pF*	101 – 431*				F	G	J	K	M		EB	EB	EB	EB	EB	EB	EB	FB	FB	FB	FB	FB	FB	FB							
470 – 910 pF*	471 – 911*				F	G	J	K	M		EB	EB	EB	EB	EB	EB	EB	FB	FB	FB	FB	FB	FB	FB	GB	GB	GB	GB			
1,000 pF	102				F	G	J	K	M		EB	EB	EB	EB	EB	EE	EE	FB	FB	FB	FB	FB	FB	FB	GB	GB	GB	GB			
1,100 pF	112				F	G	J	K	M		EB	EB	EB	EB	EB	EB	EB	FB	FB	FB	FB	FB	FB	FB	GB	GB	GB	GB			
1,200 pF	122				F	G	J	K	M		EB	EB	EB	EB	EB	EB	EB	FB	FB	FB	FB	FB	FB	FB	GB	GB	GB	GB			
1,300 pF	132				F	G	J	K	M		EB	EB	EB	EB	EC	EC	EC	FB	FB	FB	FB	FB	FC	FC	GB	GB	GB	GB			
1,500 pF	152				F	G	J	K	M		EB	EB	EB	EB	ED	EC	EC	FB	FB	FB	FB	FB	FE	FE	GB	GB	GB	GB			
1,600 pF	162				F	G	J	K	M		EB	EB	EB	EB	ED	ED	ED	FB	FB	FB	FB	FB	FE	FE	GB	GB	GB	GB			
1,800 pF	182				F	G	J	K	M		EB	EB	EB	EB	ED	ED	ED	FB	FB	FB	FB	FB	FE	FE	GB	GB	GB	GB			
2,000 pF	202				F	G	J	K	M		EB	EB	EB	EB	ED	ED	ED	FB	FB	FB	FB	FC	FE	FE	GB	GB	GB	GB			
2,200 pF	222				F	G	J	K	M		EB	EB	EB	EB	EE	EE	ED	FB	FB	FB	FB	FC	FG	FG	GB	GB	GB	GB			
2,400 pF	242				F	G	J	K	M		EB	EB	EB	EB	EC	EC	EC	FB	FB	FB	FB	FC	FC	FC							
2,700 pF	272				F	G	J	K	M		EB	EB	EB	EB	EC	EC	EC	FB	FB	FB	FB	FC	FC	FC	GB	GB	GB	GB			
3,000 pF	302				F	G	J	K	M		EC	EC	EC	EC	EC	EB	EB	FB	FB	FB	FB	FC	FF	FF							
3,300 pF	332				F	G	J	K	M		EC	EC	EC	EC	EE	EB	EB	FB	FB	FB	FB	FF	FF	FF	GB	GB	GB	GB			
3,600 pF	362				F	G	J	K	M		EC	EC	EC	EC	EE	EB	EB	FB	FB	FB	FB	FF	FF	FF							
3,900 pF	392				F	G	J	K	M		EC	EC	EC	EC	EF	EB	EB	FB	FB	FB	FB	FF	FF	FF	GB	GB	GB	GB			
4,300 pF	432				F	G	J	K	M		EC	EC	EC	EC	EC	EB	EB	FB	FB	FB	FB	FF	FF	FF							
4,700 pF	472				F	G	J	K	M		EC	EC	EC	EC	EC	EB	EB	FF	FF	FF	FF	FG	FG	FG	GB	GB	GD	GD			
5,100 pF	512				F	G	J	K	M		ED	ED	ED	ED	ED	EB	EB	FB	FB	FB	FB	FG	FG	FG							
5,600 pF	562				F	G	J	K	M		ED	ED	ED	ED	ED	EB	EB	FB	FB	FB	FB	FG	FG	FG	GB	GB	GH	GH			
6,200 pF	622				F	G	J	K	M		EB	EB	EB	EB	EB	EB	EB	FB	FB	FB	FB	FG	FB	FB							
6,800 pF	682				F	G	J	K	M		EB	EB	EB	EB	EB	EB	EB	FB	FB	FB	FB	FG	FB	FB	GB	GB	GJ	GJ	JE	JE	JB
7,500 pF	752				F	G	J	K	M		EB	EB	EB	EB	EB	EB	EB	FC	FC	FC	FC	FC	FB	FB							
8,200 pF	822				F	G	J	K	M		EC	EC	EC	EC	EB	EC	EC	FC	FC	FC	FC	FC	FB	FB	GB	GH	GB	GB	JE	JE	JB
9,100 pF	912				F	G	J	K	M		EC	EC	EC	EC	EB	EC	EC	FE	FE	FE	FE	FE	FB	FB							
10,000 pF	103				F	G	J	K	M		ED	ED	ED	ED	EB	EC	EC	FF	FF	FF	FF	FF	FB	FB	GB	GH	GB	GB	JE	JE	JB
12,000 pF	123				F	G	J	K	M		EB	EB	EB	EB	EB	ED	ED	FG	FG	FG	FG	FB	FB	FB	GB	GG	GB	GB	JE	JE	JB
15,000 pF	153				F	G	J	K	M		EB	EB	EB	EB	EB	EF	EF	FG	FG	FG	FG	FB	FC	FC	GB	GB	GB	GB	JE	JE	JB
18,000 pF	183				F	G	J	K	M		EB	EB	EB	EB	EB	EH	EH	FB	FB	FB	FB	FB	FC	FC	GB	GB	GB	GB	JE	JE	JB
22,000 pF	223				F	G	J	K	M		EB	EB	EB	EB	EC	EH	EH	FB	FB	FB	FB	FB	FF	FF	GB	GB	GB	GB	JE	JB	JB
27,000 pF	273				F	G	J	K	M		EB	EB	EB	EB	EE			FB	FB	FB	FB	FB	FG	FG	GB	GB	GB	GB	JE	JB	JB
33,000 pF	333				F	G	J	K	M		EB	EB	EB	EB	EE			FB	FB	FB	FB	FB	FH	FH	GB	GB	GB	GB	JB	JB	JB
39,000 pF	393				F	G	J	K	M		EC	EC	EC	EE	EH			FB	FB	FB	FB	FE	FH	FH	GB	GB	GB	GB	JB	JB	JB
47,000 pF	473				F	G	J	K	M		EC	EC	EC	EE	EH			FB	FB	FB	FB	FE	FJ	FJ	GB	GB	GD	GD	JB	JB	JB
56,000 pF	563				F	G	J	K	M		ED	ED	ED	EF				FB	FB	FB	FB	FF			GB	GB	GD	GD	JB	JB	JB
68,000 pF	683				F	G	J	K	M		EF	EF	EF	EH				FB	FB	FB	FC	FG			GB	GB	GK	GK	JB	JB	JB
82,000 pF	823				F	G	J	K	M		EH	EH	EH	EH				FC	FC	FC	FF	FH			GB	GB	GM	GM	JB	JB	JB
0.10 µF	104				F	G	J	K	M		EH	EH	EH					FE	FE	FE	FG	FM			GB	GD	GM	GM	JB	JB	JD
0.12 µF	124				F	G	J	K	M									FG	FG	FG	FH				GB	GH			JB	JB	JD
0.15 µF	154				F	G	J	K	M									FH	FH	FH	FM				GD	GN			JB	JB	JG
0.18 µF	184				F	G	J	K	M									FJ	FJ	FJ					GH				JB	JD	JG
0.22 µF	224				F	G	J	K	M									FK	FK	FK					GK				JB	JD	JL
0.27 µF	274				F	G	J	K	M																				JB	JF	
0.33 µF	334				F	G	J	K	M																				JD	JG	
0.39 µF	394				F	G	J	K	M																				JG		
0.47 µF	474				F	G	J	K	M																				JG		
Cap	Cap Code	Rated Voltage (VDC)									10	16	25	50	100	200	250	10	16	25	50	100	200	250	50	100	200	250	50	100	200
		Voltage Code									8	4	3	5	1	2	A	8	4	3	5	1	2	A	5	1	2	A	5	1	2
		Case Size/Series									C1206C							C1210C							C1812C				C2220C		

**Capacitance range Includes E24 decade values only. (i.e., 10, 11, 12, 13, 15, 16, 18, 20, 22, 24, 27, 30, 33, 36, 39, 43, 47, 51, 56, 62, 68, 75, 82, and 91)*
KEMET reserves the right to substitute product with an improved temperature characteristic, tighter capacitance tolerance and/or higher voltage capability within the same form factor (configuration and dimensions).
These products are protected under US Patents 7,172,985 & 7,670,981, other patents pending, and any foreign counterparts.

Table 2 – Chip Thickness/Tape & Reel Packaging Quantities

Thickness Code	Case Size1	Thickness ± Range (mm)	Paper Quantity		Plastic Quantity	
			7" Reel	13" Reel	7" Reel	13" Reel
BB	0402	0.50 ± 0.05	10,000	50,000	0	0
BD	0402	0.55 ± 0.05	10,000	50,000	0	0
CF	0603	0.80 ± 0.07	4,000	15,000	0	0
CH	0603	0.85 ± 0.07	4,000	10,000	0	0
DN	0805	0.78 ± 0.10	4,000	15,000	0	0
DP	0805	0.90 ± 0.10	4,000	15,000	0	0
DE	0805	1.00 ± 0.10	0	0	2,500	10,000
DF	0805	1.10 ± 0.10	0	0	2,500	10,000
DG	0805	1.25 ± 0.15	0	0	2,500	10,000
EB	1206	0.78 ± 0.10	0	0	4,000	10,000
EC	1206	0.90 ± 0.10	0	0	4,000	10,000
ED	1206	1.00 ± 0.10	0	0	2,500	10,000
EE	1206	1.10 ± 0.10	0	0	2,500	10,000
EF	1206	1.20 ± 0.15	0	0	2,500	10,000
EH	1206	1.60 ± 0.20	0	0	2,000	8,000
FB	1210	0.78 ± 0.10	0	0	4,000	10,000
FC	1210	0.90 ± 0.10	0	0	4,000	10,000
FE	1210	1.00 ± 0.10	0	0	2,500	10,000
FF	1210	1.10 ± 0.10	0	0	2,500	10,000
FG	1210	1.25 ± 0.15	0	0	2,500	10,000
FH	1210	1.55 ± 0.15	0	0	2,000	8,000
FM	1210	1.70 ± 0.20	0	0	2,000	8,000
FJ	1210	1.85 ± 0.20	0	0	2,000	8,000
FK	1210	2.10 ± 0.20	0	0	2,000	8,000
GB	1812	1.00 ± 0.10	0	0	1,000	4,000
GD	1812	1.25 ± 0.15	0	0	1,000	4,000
GH	1812	1.40 ± 0.15	0	0	1,000	4,000
GG	1812	1.55 ± 0.10	0	0	1,000	4,000
GK	1812	1.60 ± 0.20	0	0	1,000	4,000
GJ	1812	1.70 ± 0.15	0	0	1,000	4,000
GN	1812	1.70 ± 0.20	0	0	1,000	4,000
GM	1812	2.00 ± 0.20	0	0	500	2,000
JB	2220	1.00 ± 0.15	0	0	1,000	4,000
JD	2220	1.30 ± 0.15	0	0	1,000	4,000
JE	2220	1.40 ± 0.15	0	0	1,000	4,000
JF	2220	1.50 ± 0.15	0	0	1,000	4,000
JG	2220	1.70 ± 0.15	0	0	1,000	4,000
JL	2220	2.00 ± 0.20	0	0	500	2,000
Thickness Code	**Case Size1**	**Thickness ± Range (mm)**	**7" Reel**	**13" Reel**	**7" Reel**	**13" Reel**
			Paper Quantity[1]		**Plastic Quantity**	

Package quantity based on finished chip thickness specifications.

Table 3 – Chip Capacitor Land Pattern Design Recommendations per IPC–7351

EIA Size Code	Metric Size Code	Density Level A: Maximum (Most) Land Protrusion (mm)					Density Level B: Median (Nominal) Land Protrusion (mm)					Density Level C: Minimum (Least) Land Protrusion (mm)				
		C	Y	X	V1	V2	C	Y	X	V1	V2	C	Y	X	V1	V2
0402	1005	0.50	0.72	0.72	2.20	1.20	0.45	0.62	0.62	1.90	1.00	0.40	0.52	0.52	1.60	0.80
0603	1608	0.90	1.15	1.10	4.00	2.10	0.80	0.95	1.00	3.10	1.50	0.60	0.75	0.90	2.40	1.20
0805	2012	1.00	1.35	1.55	4.40	2.60	0.90	1.15	1.45	3.50	2.00	0.75	0.95	1.35	2.80	1.70
1206	3216	1.60	1.35	1.90	5.60	2.90	1.50	1.15	1.80	4.70	2.30	1.40	0.95	1.70	4.00	2.00
1210	3225	1.60	1.35	2.80	5.65	3.80	1.50	1.15	2.70	4.70	3.20	1.40	0.95	2.60	4.00	2.90
1210[1]	3225	1.50	1.60	2.90	5.60	3.90	1.40	1.40	2.80	4.70	3.30	1.30	1.20	2.70	4.00	3.00
1812	4532	2.15	1.60	3.60	6.90	4.60	2.05	1.40	3.50	6.00	4.00	1.95	1.20	3.40	5.30	3.70
2220	5650	2.75	1.70	5.50	8.20	6.50	2.65	1.50	5.40	7.30	5.90	2.55	1.30	5.30	6.60	5.60

[1] *Only for capacitance values ≥ 22 µF*

Density Level A: *For low-density product applications. Recommended for wave solder applications and provides a wider process window for reflow solder processes. KEMET only recommends wave soldering of EIA 0603, 0805, and 1206 case sizes.*

Density Level B: *For products with a moderate level of component density. Provides a robust solder attachment condition for reflow solder processes.*

Density Level C: *For high component density product applications. Before adapting the minimum land pattern variations the user should perform qualification testing based on the conditions outlined in IPC Standard 7351 (IPC–7351).*

Image below based on Density Level B for an EIA 1210 case size.

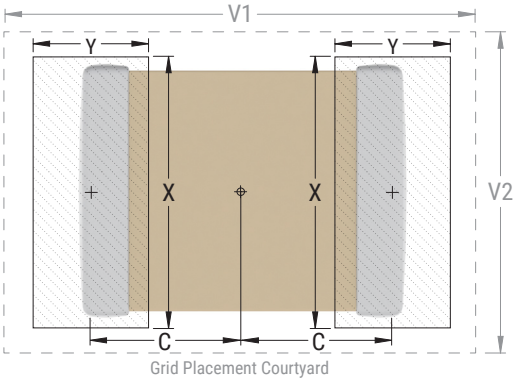

Soldering Process

Recommended Soldering Technique:

- Solder wave or solder reflow for EIA case sizes 0603, 0805 and 1206
- All other EIA case sizes are limited to solder reflow only

Recommended Reflow Soldering Profile:

KEMET's families of surface mount multilayer ceramic capacitors (SMD MLCCs) are compatible with wave (single or dual), convection, IR or vapor phase reflow techniques. Preheating of these components is recommended to avoid extreme thermal stress. KEMET's recommended profile conditions for convection and IR reflow reflect the profile conditions of the IPC/J-STD-020 standard for moisture sensitivity testing. These devices can safely withstand a maximum of three reflow passes at these conditions.

Profile Feature	Termination Finish	
	SnPb	100% Matte Sn
Preheat/Soak		
Temperature Minimum (T_{Smin})	100°C	150°C
Temperature Maximum (T_{Smax})	150°C	200°C
Time (t_S) from T_{Smin} to T_{Smax}	60 – 120 seconds	60 – 120 seconds
Ramp-Up Rate (T_L to T_P)	3°C/second maximum	3°C/second maximum
Liquidous Temperature (T_L)	183°C	217°C
Time Above Liquidous (t_L)	60 – 150 seconds	60 – 150 seconds
Peak Temperature (T_P)	235°C	260°C
Time Within 5°C of Maximum Peak Temperature (t_P)	20 seconds maximum	30 seconds maximum
Ramp-Down Rate (T_P to T_L)	6°C/second maximum	6°C/second maximum
Time 25°C to Peak Temperature	6 minutes maximum	8 minutes maximum

Note 1: All temperatures refer to the center of the package, measured on the capacitor body surface that is facing up during assembly reflow.

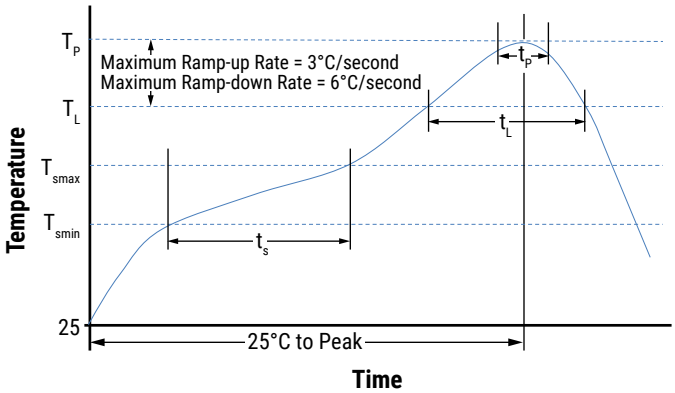

Storage and Handling

Ceramic chip capacitors should be stored in normal working environments. While the chips themselves are quite robust in other environments, solderability will be degraded by exposure to high temperatures, high humidity, corrosive atmospheres, and long term storage. In addition, packaging materials will be degraded by high temperature–reels may soften or warp and tape peel force may increase. KEMET recommends that maximum storage temperature not exceed 40ºC and maximum storage humidity not exceed 70% relative humidity. Temperature fluctuations should be minimized to avoid condensation on the parts and atmospheres should be free of chlorine and sulfur bearing compounds. For optimized solderability chip stock should be used promptly, preferably within 1.5 years of receipt.

Construction

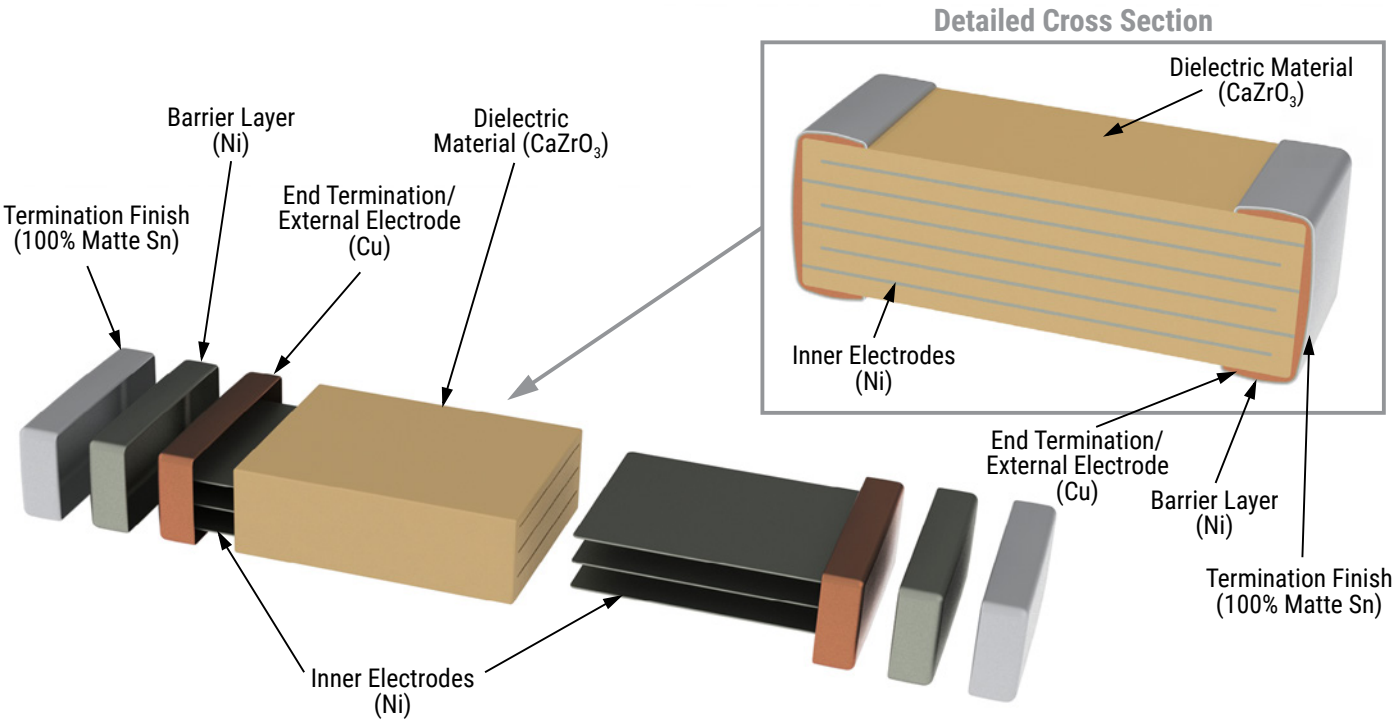

Capacitor Marking (Optional)

Laser marking option is not available on:

- C0G, Ultra Stable X8R and Y5V dielectric devices
- EIA 0402 case size devices
- EIA 0603 case size devices with Flexible Termination option.
- KPS Commercial and Automotive grade stacked devices.

These capacitors are supplied unmarked only.

Tape & Reel Packaging Information

KEMET offers multilayer ceramic chip capacitors packaged in 8, 12 and 16 mm tape on 7" and 13" reels in accordance with EIA Standard 481. This packaging system is compatible with all tape-fed automatic pick and place systems. See Table 2 for details on reeling quantities for commercial chips.

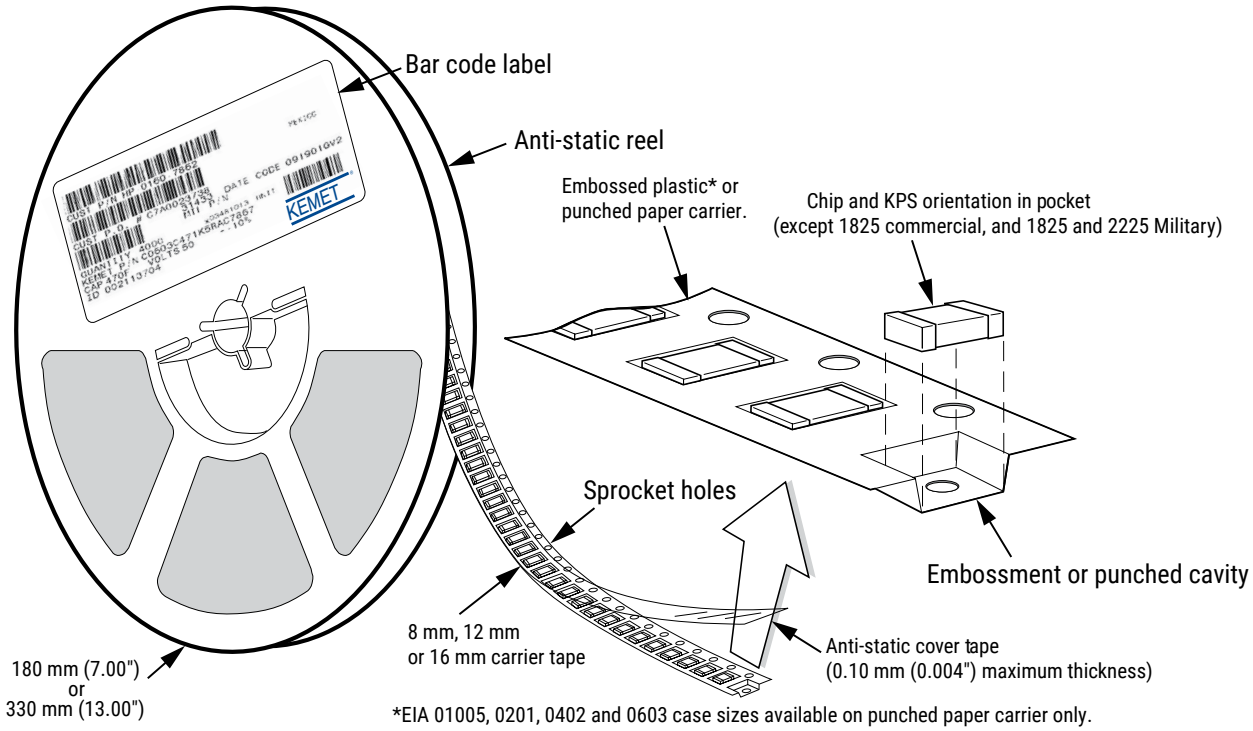

Table 5 – Carrier Tape Configuration, Embossed Plastic & Punched Paper (mm)

EIA Case Size	Tape Size (W)*	Embossed Plastic		Punched Paper	
		7" Reel	13" Reel	7" Reel	13" Reel
		Pitch (P_1)*		Pitch (P_1)*	
01005 – 0402	8			2	2
0603	8			4	4
0805	8	4	4	4	4
1206 – 1210	8	4	4	4	4
1805 – 1808	12	4	4		
≥ 1812	12	8	8		
KPS 1210	12	8	8		
KPS 1812 and 2220	16	12	12		
Array 0612	8	4	4		

**Refer to Figures 1 and 2 for W and P_1 carrier tape reference locations.*
**Refer to Tables 6 and 7 for tolerance specifications.*

Figure 1 – Embossed (Plastic) Carrier Tape Dimensions

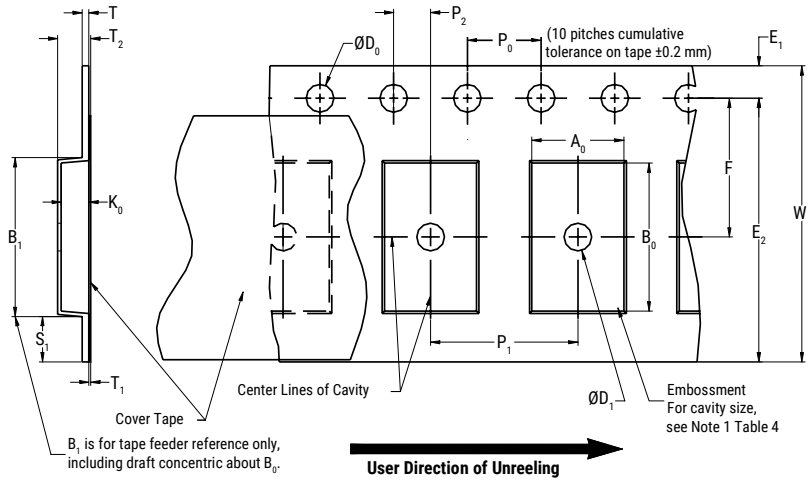

Table 6 – Embossed (Plastic) Carrier Tape Dimensions

Metric will govern

Constant Dimensions — Millimeters (Inches)									
Tape Size	D_0	D_1 Minimum Note 1	E_1	P_0	P_2	R Reference Note 2	S_1 Minimum Note 3	T Maximum	T_1 Maximum
8 mm	1.5 +0.10/−0.0 (0.059 +0.004/−0.0)	1.0 (0.039)	1.75 ±0.10 (0.069 ±0.004)	4.0 ±0.10 (0.157 ±0.004)	2.0 ±0.05 (0.079 ±0.002)	25.0 (0.984)	0.600 (0.024)	0.600 (0.024)	0.100 (0.004)
12 mm		1.5 (0.059)				30 (1.181)			
16 mm									

Variable Dimensions — Millimeters (Inches)								
Tape Size	Pitch	B_1 Maximum Note 4	E_2 Minimum	F	P_1	T_2 Maximum	W Maximum	A_0,B_0 & K_0
8 mm	Single (4 mm)	4.35 (0.171)	6.25 (0.246)	3.5 ±0.05 (0.138 ±0.002)	4.0 ±0.10 (0.157 ±0.004)	2.5 (0.098)	8.3 (0.327)	Note 5
12 mm	Single (4 mm) and double (8 mm)	8.2 (0.323)	10.25 (0.404)	5.5 ±0.05 (0.217 ±0.002)	8.0 ±0.10 (0.315 ±0.004)	4.6 (0.181)	12.3 (0.484)	
16 mm	Triple (12 mm)	12.1 (0.476)	14.25 (0.561)	7.5 ±0.05 (0.138 ±0.002)	12.0 ±0.10 (0.157 ±0.004)	4.6 (0.181)	16.3 (0.642)	

1. The embossment hole location shall be measured from the sprocket hole controlling the location of the embossment. Dimensions of the embossment location and the hole location shall be applied independently of each other.

2. The tape with or without components shall pass around R without damage (see Figure 6.)

3. If S_1 < 1.0 mm, there may not be enough area for a cover tape to be properly applied (see EIA Standard 481, paragraph 4.3, section b.)

4. B_1 dimension is a reference dimension for tape feeder clearance only.

5. The cavity defined by A_0, B_0 and K_0 shall surround the component with sufficient clearance that:

(a) the component does not protrude above the top surface of the carrier tape.

(b) the component can be removed from the cavity in a vertical direction without mechanical restriction, after the top cover tape has been removed.

(c) rotation of the component is limited to 20° maximum for 8 and 12 mm tapes and 10° maximum for 16 mm tapes (see Figure 3.)

(d) lateral movement of the component is restricted to 0.5 mm maximum for 8 and 12 mm wide tape and to 1.0 mm maximum for 16 mm tape (see Figure 4.)

(e) for KPS product, A_0 and B_0 are measured on a plane 0.3 mm above the bottom of the pocket.

(f) see addendum in EIA Standard 481 for standards relating to more precise taping requirements.

Figure 2 – Punched (Paper) Carrier Tape Dimensions

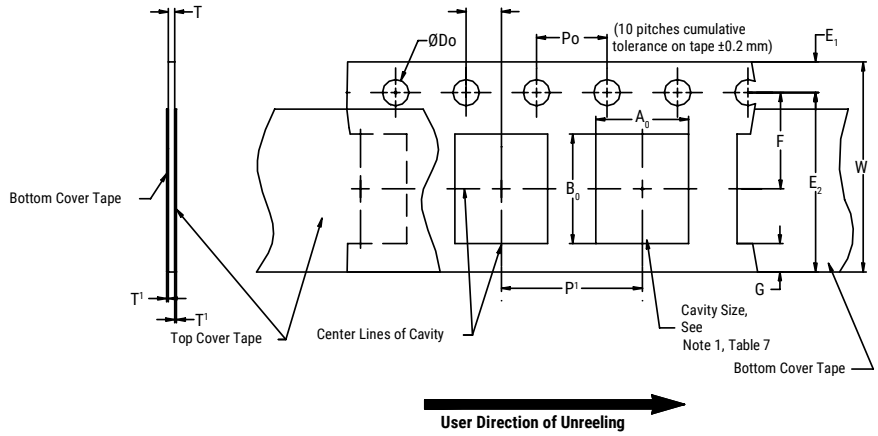

Table 7 – Punched (Paper) Carrier Tape Dimensions

Metric will govern

Constant Dimensions — Millimeters (Inches)							
Tape Size	D_0	E_1	P_0	P_2	T_1 Maximum	G Minimum	R Reference Note 2
8 mm	1.5 +0.10 -0.0 (0.059 +0.004 -0.0)	1.75 ±0.10 (0.069 ±0.004)	4.0 ±0.10 (0.157 ±0.004)	2.0 ±0.05 (0.079 ±0.002)	0.10 (0.004) maximum	0.75 (0.030)	25 (0.984)
Variable Dimensions — Millimeters (Inches)							
Tape Size	Pitch	E2 Minimum	F	P_1	T Maximum	W Maximum	A_0 B_0
8 mm	Single (4 mm)	6.25 (0.246)	3.5 ±0.05 (0.138 ±0.002)	4.0 ±0.10 (0.157 ±0.004)	1.1 (0.043)	8.3 (0.327)	Note 1

1. The cavity defined by A_0, B_0 and T shall surround the component with sufficient clearance that:

a) the component does not protrude beyond either surface of the carrier tape.

b) the component can be removed from the cavity in a vertical direction without mechanical restriction, after the top cover tape has been removed.

c) rotation of the component is limited to 20° maximum (see Figure 3.)

d) lateral movement of the component is restricted to 0.5 mm maximum (see Figure 4.)

e) see addendum in EIA Standard 481 for standards relating to more precise taping requirements.

2. The tape with or without components shall pass around R without damage (see Figure 6.)

Packaging Information Performance Notes

1. Cover Tape Break Force: 1.0 kg minimum.
2. Cover Tape Peel Strength: The total peel strength of the cover tape from the carrier tape shall be:

Tape Width	Peel Strength
8 mm	0.1 to 1.0 newton (10 to 100 gf)
12 and 16 mm	0.1 to 1.3 newton (10 to 130 gf)

The direction of the pull shall be opposite the direction of the carrier tape travel. The pull angle of the carrier tape shall be 165° to 180° from the plane of the carrier tape. During peeling, the carrier and/or cover tape shall be pulled at a velocity of 300 ±10 mm/minute.
3. Labeling: Bar code labeling (standard or custom) shall be on the side of the reel opposite the sprocket holes. *Refer to EIA Standards 556 and 624*.

Figure 3 – Maximum Component Rotation

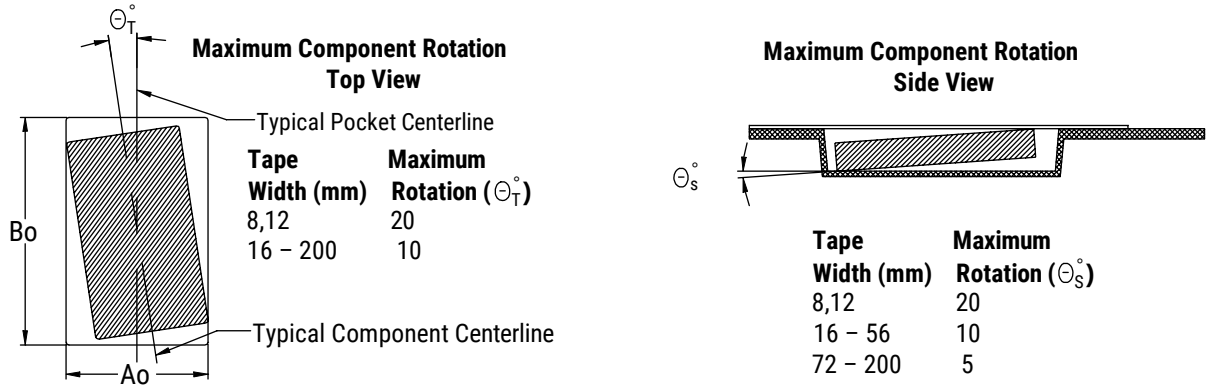

Figure 4 – Maximum Lateral Movement

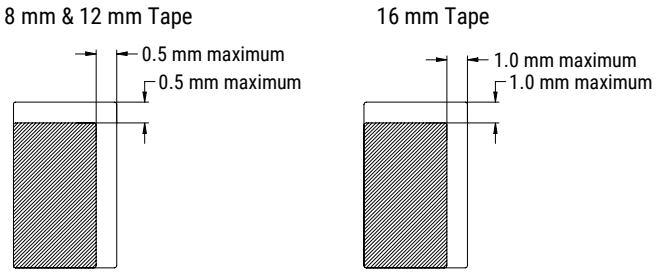

Figure 5 – Bending Radius

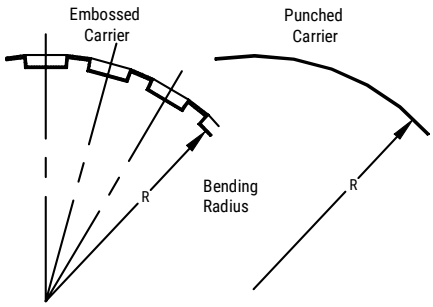

Figure 6 – Reel Dimensions

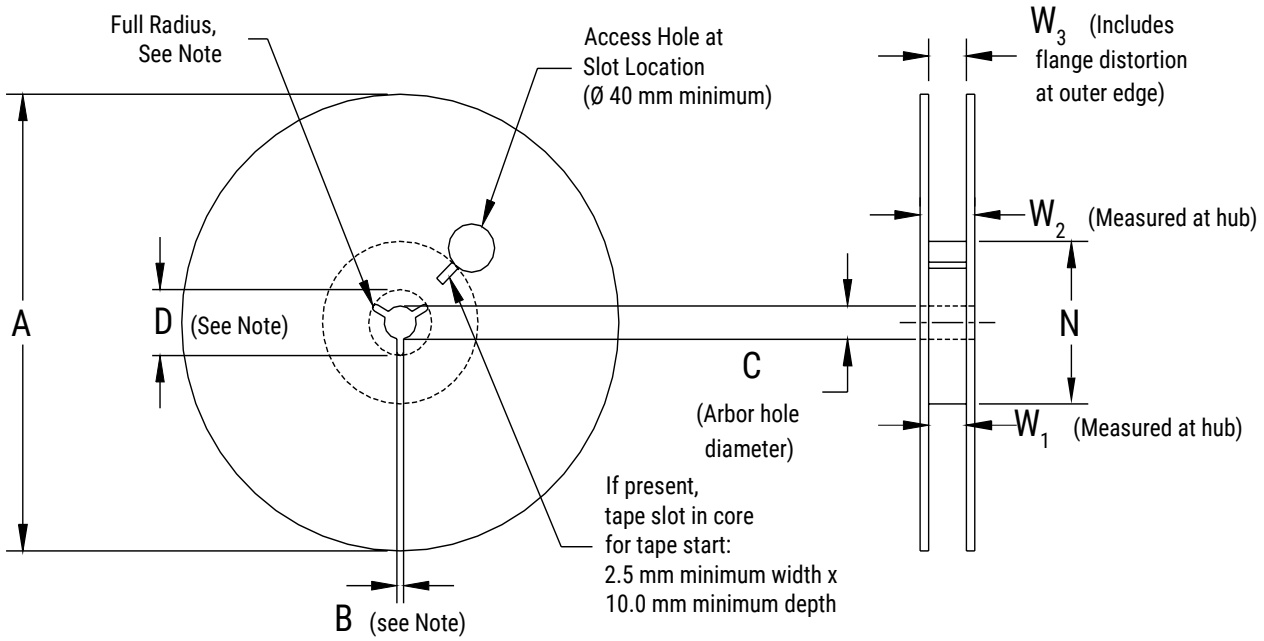

Note: Drive spokes optional; if used, dimensions B and D shall apply.

Table 8 – Reel Dimensions

Metric will govern

Constant Dimensions — Millimeters (Inches)				
Tape Size	A	B Minimum	C	D Minimum
8 mm	178 ±0.20 (7.008 ±0.008) or 330 ±0.20 (13.000 ±0.008)	1.5 (0.059)	13.0 +0.5/−0.2 (0.521 +0.02/−0.008)	20.2 (0.795)
12 mm				
16 mm				

Variable Dimensions — Millimeters (Inches)				
Tape Size	N Minimum	W_1	W_2 Maximum	W_3
8 mm	50 (1.969)	8.4 +1.5/−0.0 (0.331 +0.059/−0.0)	14.4 (0.567)	Shall accommodate tape width without interference
12 mm		12.4 +2.0/−0.0 (0.488 +0.078/−0.0)	18.4 (0.724)	
16 mm		16.4 +2.0/−0.0 (0.646 +0.078/−0.0)	22.4 (0.882)	

Figure 7 – Tape Leader & Trailer Dimensions

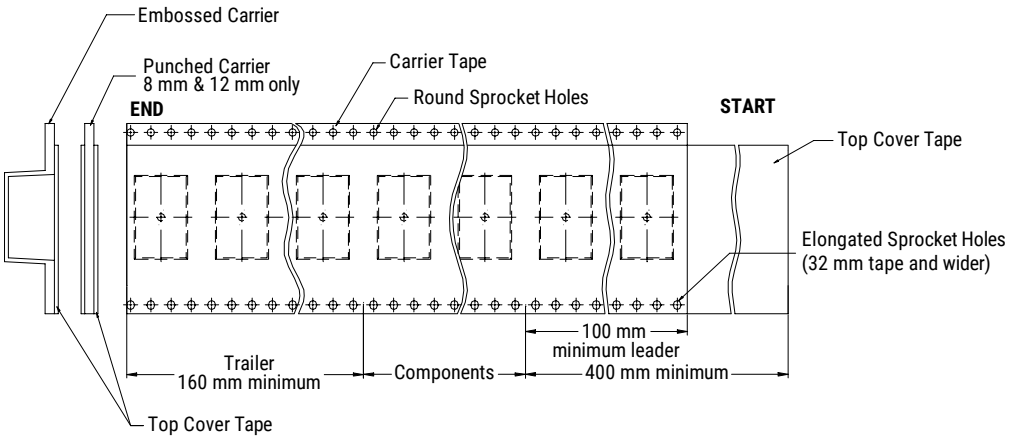

Figure 8 – Maximum Camber

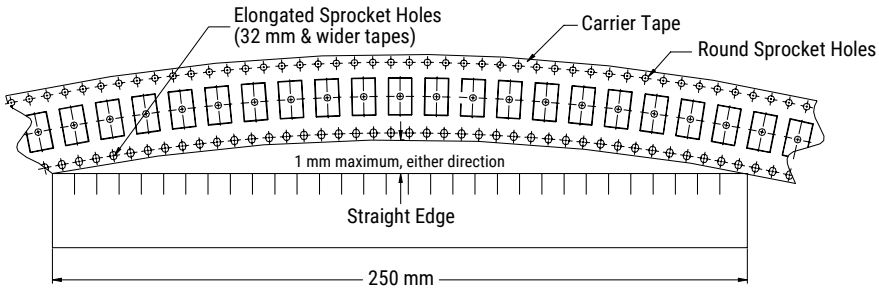

KEMET Electronics Corporation Sales Offices

For a complete list of our global sales offices, please visit www.kemet.com/sales.

Disclaimer

YAGEO Corporation and its affiliates do not recommend the use of commercial or automotive grade products for high reliability applications or manned space flight.

All product specifications, statements, information and data (collectively, the "Information") in this datasheet are subject to change. The customer is responsible for checking and verifying the extent to which the Information contained in this publication is applicable to an order at the time the order is placed. All Information given herein is believed to be accurate and reliable, but it is presented without guarantee, warranty, or responsibility of any kind, expressed or implied.

Statements of suitability for certain applications are based on KEMET Electronics Corporation's ("KEMET") knowledge of typical operating conditions for such applications, but are not intended to constitute – and KEMET specifically disclaims – any warranty concerning suitability for a specific customer application or use. The Information is intended for use only by customers who have the requisite experience and capability to determine the correct products for their application. Any technical advice inferred from this Information or otherwise provided by KEMET with reference to the use of KEMET's products is given gratis, and KEMET assumes no obligation or liability for the advice given or results obtained.

Although KEMET designs and manufactures its products to the most stringent quality and safety standards, given the current state of the art, isolated component failures may still occur. Accordingly, customer applications which require a high degree of reliability or safety should employ suitable designs or other safeguards (such as installation of protective circuitry or redundancies) in order to ensure that the failure of an electrical component does not result in a risk of personal injury or property damage.

Although all product–related warnings, cautions and notes must be observed, the customer should not assume that all safety measures are indicated or that other measures may not be required.

KEMET is a registered trademark of KEMET Electronics Corporation.