ALS80/81, High CV, +105°C

Overview

KEMET's ALS80/81 high CV screw terminal capacitors features the same high ripple currents and long life characteristics as the ALS70/71 series, but can operate at higher temperatures. Volumetric efficiency ensures the maximum capacitance capability in a smaller size. They are similarly suited for high reliability and long life applications such as frequency converters, uninterruptible power supply (UPS) systems, and switch mode power supplies (SMPS). The extended temperature range allows increased ripple currents at lower temperatures.

Applications

Typical applications for KEMET's ALS80/81 series of capacitors include alternative energy, smoothing, energy storage or pulse operation in telecommunication demanding power supplies, process control, AC motor control, traction, welding, and measuring.

Benefits

- Maximum capacitance capability in a smaller size
- Long life, up to 9,000 hours at +105°C (V_R, I_R applied)
- High ripple current
- Excellent surge voltage capability
- PET sleeve recognized to UL QMTR2, UL No. E358957 *(Other options available upon request)*
- Optimized designs available upon request

Part Number System

ALS8	0	A	303	DA	025	
Series	Stud Option	Termination	Capacitance Code (µF)	Size Code	Rated Voltage (VDC)	
Screw Terminal Aluminum Electrolytic	0 = Plain can 1 = Threaded mounting stud	See Termination Table	First two digits represent significant figures. Third digit specifies number of zeros.	See Dimension Table	025 = 25 040 = 40 063 = 63 100 = 100 200 = 200	250 = 250 350 = 350 400 = 400 450 = 450 500 = 500

© KEMET Electronics Corporation • One East Broward Boulevard
Fort Lauderdale, FL 33301 USA • 954-766-2800 • www.kemet.com

Performance Characteristics

Item	Performance Characteristics		
Capacitance Range	300 – 1,200,000 µF		
Rated Voltage	25 – 500 VDC		
Operating Temperature	−40 to +105°C		
Storage Temperature Range	−55 to +105°C		
Capacitance Tolerance	±20% at 100 Hz/+20°C		
Operational Lifetime	D (mm)	Rated Voltage and Ripple Current at +105°C (hours)	Rated Voltage at +105°C (hours)
	36	6,000	10,000
	51	7,000	11,000
	66	8,000	13,000
	77, 90	9,000	15,000
End of Life Requirement	25 ≤ UR ≤ 100 VDC ΔC/C < ±20%, UR > 100 VDC ΔC/C < ±15% ESR < 3 x initial limit		
Shelf Life	2,000 hours at +85°C or 30,000 hours at +40°C 0 VDC		
Leakage Current	If rated capacitance is < 330,000 µF, then I = 0.003 CV or 6,000 µA (whichever is smaller) If rated capacitance is ≥ 330,000 µF, then I = 16,000 µA		
	C = rated capacitance (µF), V = rated voltage (VDC) Voltage applied for 5 minutes at +20°C		
Vibration Test Specifications		Procedure	Requirements
	Case Length < 220 mm	0.75 mm displacement amplitude or 10 G maximum acceleration Vibration applied for three 2-hour sessions at 10 – 55 Hz (Capacitor clamped by body)	No leakage of electrolyte or other visible damage Deviations in capacitance from initial measurements must not exceed Δ C/C < 5%
	Case Length ≥ 220 mm	0.35 mm displacement amplitude or 5 G maximum acceleration Vibration applied for three 0.5- hour sessions at 10 – 55 Hz (Capacitor clamped by body)	
Standards	IEC 60384–4 long life grade 40/105/56		

Surge Voltage

Condition	Voltage (VDC)									
	25	40	63	100	200	250	350	400	450	500
≤ 30 s surge followed by a no load period of 330 s, 1,000 cycles at +105°C	28.75	46	72.45	115	230	287.5	385	440	495	550

Test Method & Performance

Endurance Life Test		
Conditions	Performance	
Temperature	+105°C	
Test Duration	2,000 hours	
Ripple Current	Rated ripple current in specified table	
Voltage	The sum of DC voltage and the peak AC voltage must not exceed the rated voltage of the capacitor	
Performance	**The following specifications will be satisfied when the capacitor is tested at +20°C**	
Capacitance Change	≤ 160 V	Within 15% of the initial value
	≥ 160 V	Within 10% of the initial value
Equivalent Series Resistance	Does not exceed 150% of the initial limit	
Leakage Current	Does not exceed leakage current limit	

Dimensions – Millimeters

Size Code	Dimensions in mm						Approximate Weight Grams	Mounting Clamps
	D	L	LT	S	V	Mounting Stud (M x H)		
	±1	±2	±1	±0.5	Nominal	±1		
DA	36	52	58.5	12.8	8.0	M8 x 12	75	V3/H2/2736
DB	36	62	67.5	12.8	8.0	M8 x 12	90	V3/H2/2736
DE	36	82	87.5	12.8	8.0	M8 x 12	115	V3/H2/2736
DF	36	105	111.5	12.8	8.0	M8 x 12	140	V3/H2/2736
KE	51	82	86.5	22.2	13.7	M12 x 16	220	V4/2737
KF	51	105	110.5	22.2	13.7	M12 x 16	300	V4/2737
LM	63.5	131	135	28.5	15.8	M12 x 16	600	V8
MF	66	105	110.5	28.5	15.8	M12 x 16	505	V10/2738
NF	77	105	110.5	31.8	19.0	M12 x 16	690	V11
NJ	77	115	119	31.8	19.0	M12 x 16	766	V11
NP	77	146	150.5	31.8	19.0	M12 x 16	960	V11
NW	77	169	174	31.8	19.0	M12 x 16	1,160	V11
NS	77	194	198	31.8	19.0	M12 x 16	1,400	V11
NT	77	220	224.5	31.8	19.0	M12 x 16	1,450	V11
QC	90	67	71.5	31.8	25.0	M12 x 16	615	V90N
QH	90	98	103.5	31.8	25.0	M12 x 16	900	V90N
QM	90	131	135	31.8	25.0	M12 x 16	1,300	V90N
QP	90	146	149.5	31.8	25.0	M12 x 16	1,345	V90N
QW	90	169	174	31.8	25.0	M12 x 16	1,500	V90N
QS	90	194	198	31.8	25.0	M12 x 16	1,800	V90N
QT	90	220	223.5	31.8	25.0	M12 x 16	2,000	V90N

Note: Dimensions include sleeving. LT listed is for A-type termination code. Information for other termination codes is available upon request. Mounting Clamps, other accessories and hardware are all sold separately and not included with the capacitor. See Accessory Datasheet.

Dimensions – Inches

Size Code	Dimensions in inches					
	D	L	LT	S	V	Mounting Stud (M x H)
	±0.039	±0.078	±0.039	±0.019	Nominal	±0.039
DA	1.417	2.047	2.303	0.5039	0.3150	M8 x 0.472
DB	1.417	2.441	2.657	0.5039	0.3150	M8 x 0.472
DE	1.417	3.228	3.445	0.5039	0.3150	M8 x 0.472
DF	1.417	4.134	4.390	0.5039	0.3150	M8 x 0.472
KE	2.008	3.228	3.406	0.8740	0.5394	M12 x 0.630
KF	2.008	4.134	4.350	0.8740	0.5394	M12 x 0.630
LM	2.5	5.157	5.315	1.1220	0.6220	M12 x 0.630
MF	2.598	4.134	4.350	1.1220	0.6220	M12 x 0.630
NF	3.032	4.134	4.350	1.2520	0.7480	M12 x 0.630
NJ	3.032	4.528	4.685	1.2520	0.7480	M12 x 0.630
NP	3.032	5.748	5.925	1.2520	0.7480	M12 x 0.630
NW	3.032	6.654	6.850	1.2520	0.7480	M12 x 0.630
NS	3.032	7.638	7.795	1.2520	0.7480	M12 x 0.630
NT	3.032	8.661	8.839	1.2520	0.7480	M12 x 0.630
QC	3.543	2.638	2.815	1.2520	0.9843	M12 x 0.630
QH	3.543	3.858	4.075	1.2520	0.9843	M12 x 0.630
QM	3.543	5.157	5.315	1.2520	0.9843	M12 x 0.630
QP	3.543	5.748	5.886	1.2520	0.9843	M12 x 0.630
QW	3.543	6.654	6.850	1.2520	0.9843	M12 x 0.630
QS	3.543	7.638	7.795	1.2520	0.9843	M12 x 0.630
QT	3.543	8.661	8.799	1.2520	0.9843	M12 x 0.630

Note: Dimensions include sleeving. LT listed is for A-type termination code. Information for other termination codes is available upon request.

Termination Tables

Termination Code / Diameter (mm/inches)	A	C	G	H	P	U
36/1.417	•			•		
51/2.008	•			•		
63.5/2.5	•	•		•		
66/2.598	•	•		•		
77/3.032	•	•	•	•	•	•
90/3.543	•	•	•	•		

Termination Tables cont.

Termination Code	Thread	Termination Style	T mm	T inches	DT mm	DT inches	Thread Depth (TD) mm/inches	Z mm/inches
			± 0.5	±0.019	± 0.5	±0.019	Minimum	Nominal
Standard Termination Option								
A (D = 36)	M5 x 0.8	Round	7.1	0.281	8	0.315	10/0.394	
A (D > 36)	M5 x 0.8	Oval	5.5	0.217	13	0.512	10/0.394	10/0.394
Other Termination Options								
C	M6 x 1.0	Round	5.5	0.217	13	0.512	10/0.394	
G	M6 x 1.0	Round	6.4	0.250	17	0.670	11.8/0.465	
H	10-32 UNF class 2B	Round	7.1	0.281	8	0.315	10/0.394	
P (offset)	M6 x 1.0	Round	7.1	0.281	13	0.512	10/0.394	
U (offset)	M5 x 0.8	Round	7.1	0.281	13	0.512	10/0.394	
Dimensions in mm and inches								

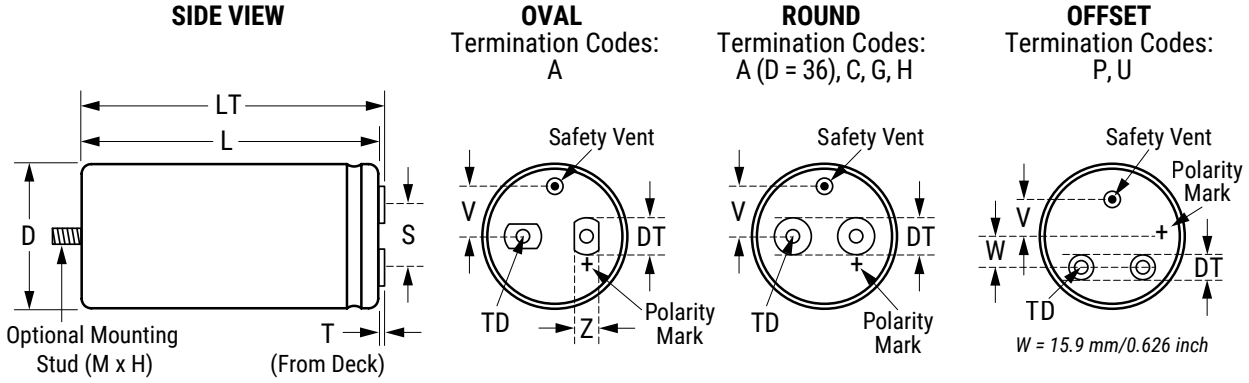

Case Polarity

Due to the presence of electrolyte in the capacitor, the aluminum can and stud mounting will essentially be at the same polarity as the negative terminal. We recommend that the stud and can be insulated (see accessories for insulating nuts).

Terminations

Aluminum inserts with M5 threads as standard, have a maximum torque 2NM. Optional M6 threaded inserts have a maximum torque 4NM. Maximum torque for stud mounting M8:4NM and M12:8NM.

Shelf Life

The capacitance, ESR and impedance of a capacitor will not change significantly after extended storage periods, however, the leakage current will very slowly increase. KEMET products are particularly stable and allow a shelf life in excess of three years at 40°C. See sectional specification under each product series for specific data.

Re-Age (Reforming) Procedure

Apply the rated voltage to the capacitor at room temperature for a period of one hour, or until the leakage current has fallen to a steady value below the specified limit. During re-aging, a maximum charging current of twice the specified leakage current or 5 mA (whichever is greater) is suggested.

Reliability

The reliability of a component can be defined as the probability that it will perform satisfactorily under a given set of conditions for a given length of time.

In practice, it is impossible to predict with absolute certainty how any individual component will perform. Therefore, we must utilize probability theory. It is also necessary to clearly define the level of stress involved (e.g., operating voltage, ripple current, temperature and time). Finally, the meaning of satisfactory performance must be defined by specifying a set of conditions that determine the end of life of the component.

Reliability as a function of time, R(t), is normally expressed as: $R(t)=e^{-\lambda t}$, where R(t) is the probability that the component will perform satisfactorily for time t, and λ is the failure rate.

Failure Rate

The failure rate is the number of components failing per unit time. The failure rate of most electronic components follows the characteristic pattern:

- Early failures are removed during the manufacturing process.
- The operational life is characterized by a constant failure rate.
- The wear out period is characterized by a rapidly increasing failure rate.

The failures in time (FIT) are given with a 60% confidence level for the various type codes. By convention, FIT is expressed as 1×10^{-9} failures per hour. Failure rate is also expressed as a percentage of failures per 1,000 hours, e.g., 100 FIT = 1×10^{-7} failures per hour = 0.01%/1,000 hours.

End of Life Definition

Catastrophic Failure: short circuit, open circuit or safety vent operation.

MTBF

The mean time between failures (MTBF) is simply the inverse of the failure rate.

MTBF= 1/λ

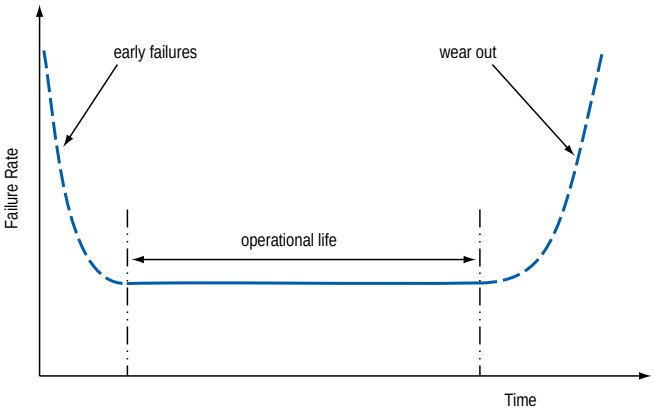

The failure rate is derived from our periodic test results. The failure rate (λ_R) is, therefore, only given at test temperature for life tests. An estimation is also given at 40°C. The expected failure rate for this capacitor range is based on our periodic test results for capacitors with structural similarity. Failure rate is frequently quoted in FIT (Failures In Time) where 1 FIT = 1 x 10^{-9} failures per hour. Failure rate per hour includes both catastrophic and parametric failures.

T_a	Failure Rate per Hour
85°C	220 FIT
40°C	10 FIT

Environmental Compliance

All Part Numbers in this datasheet are Reach and RoHS compliant and Halogen-Free.

As an environmentally conscious company, KEMET is working continuously with improvements concerning the environmental effects of both our capacitors and their production.

In Europe (RoHS Directive) and in some other geographical areas such as China, legislation has been put in place to prevent the use of some hazardous materials, such as lead (Pb), in electronic equipment. All products in this catalog are produced to help our customers' obligations to guarantee their products and fulfill these legislative requirements. The only material of concern in our products has been lead (Pb), which has been removed from all designs to fulfill the requirement of containing less than 0.1% of lead in any homogeneous material. KEMET will closely follow any changes in legislation worldwide and make any necessary changes in its products, whenever needed.

Some customer segments such as medical, military and automotive electronics may still require the use of lead in electrode coatings. To clarify the situation and distinguish products from each other, a special symbol is used on the packaging labels for RoHS compatible capacitors.

Due to customer requirements, there may appear additional markings such as lead-free (LF), or lead-free wires (LFW) on the label.

Table 1 – Ratings & Part Number Reference

VDC	Rated Capacitance	Size Code	Case Size	Ripple Current		ESR Maximum	Impedance Maximum	Part Number
	100 Hz 20°C (µF)		D x L (mm)	100 Hz 105°C (A)	10 kHz 105°C (A)	100 Hz 20°C (mΩ)	10 kHz 20°C (mΩ)	
25	30,000	DA	36 x 52	8.6	10.4	48	43	ALS8(1)(2)303DA025
25	39,000	DB	36 x 62	9.8	11.7	38	34	ALS8(1)(2)393DB025
25	62,000	DE	36 x 82	12.0	13.8	25	23	ALS8(1)(2)623DE025
25	82,000	DF	36 x 105	12.9	14.5	20	19	ALS8(1)(2)823DF025
25	120,000	KE	51 x 82	15.2	16.4	18	17	ALS8(1)(2)124KE025
25	180,000	KF	51 x 105	17.6	18.7	13	13	ALS8(1)(2)184KF025
25	270,000	QC	90 x 67	19.8	20.4	13	13	ALS8(1)(2)274QC025
25	300,000	LM	63.5 x 131	25.0	26.3	9	9	ALS8(1)(2)304LM025
25	300,000	MF	66 x 105	24.2	25.4	9	9	ALS8(1)(2)304MF025
25	430,000	NF	77 x 105	24.3	25.0	9	10	ALS8(1)(2)434NF025
25	470,000	NJ	77 x 115	24.7	25.4	9	9	ALS8(1)(2)474NJ025
25	510,000	QH	90 x 98	27.8	28.7	7	9	ALS8(1)(2)514QH025
25	560,000	NP	77 x 146	26.8	27.5	8	9	ALS8(1)(2)564NP025
25	620,000	QM	90 x 131	31.0	31.8	7	8	ALS8(1)(2)624QM025
25	680,000	NW	77 x 169	28.4	29.0	7	8	ALS8(1)(2)684NW025
25	750,000	QP	90 x 146	32.8	33.6	6	8	ALS8(1)(2)754QP025
25	820,000	NS	77 x 194	29.2	29.7	6	8	ALS8(1)(2)824NS025
25	910,000	NT	77 x 220	29.5	30.0	6	8	ALS8(1)(2)914NT025
25	910,000	QW	90 x 169	34.9	35.6	5	7	ALS8(1)(2)914QW025
25	1,200,000	QS	90 x 194	36.2	36.8	5	7	ALS8(1)(2)125QS025
25	1,200,000	QT	90 x 220	36.5	37.1	5	7	ALS8(1)(2)125QT025
40	13,000	DA	36 x 52	8.0	10.4	49	41	ALS8(1)(2)133DA040
40	16,000	DB	36 x 62	9.0	11.7	40	34	ALS8(1)(2)163DB040
40	24,000	DE	36 x 82	10.9	13.6	28	24	ALS8(1)(2)243DE040
40	36,000	DF	36 x 105	12.4	14.7	21	18	ALS8(1)(2)363DF040
40	51,000	KE	51 x 82	14.6	16.2	18	16	ALS8(1)(2)513KE040
40	75,000	KF	51 x 105	17.0	18.6	14	13	ALS8(1)(2)753KF040
40	110,000	QC	90 x 67	19.4	20.4	13	13	ALS8(1)(2)114QC040
40	130,000	LM	63.5 x 131	24.3	26.1	9	9	ALS8(1)(2)134LM040
40	130,000	MF	66 x 105	23.4	25.1	9	9	ALS8(1)(2)134MF040
40	180,000	NF	77 x 105	23.7	24.8	9	9	ALS8(1)(2)184NF040
40	200,000	NJ	77 x 115	24.1	25.1	9	9	ALS8(1)(2)204NJ040
40	220,000	QH	90 x 98	27.1	28.2	8	9	ALS8(1)(2)224QH040
40	240,000	NP	77 x 146	26.3	27.2	8	9	ALS8(1)(2)244NP040
40	270,000	QM	90 x 131	30.2	31.4	7	8	ALS8(1)(2)274QM040
40	300,000	NW	77 x 169	27.9	28.8	7	8	ALS8(1)(2)304NW040
40	330,000	QP	90 x 146	32.1	33.2	6	8	ALS8(1)(2)334QP040
40	360,000	NS	77 x 194	28.9	29.7	7	8	ALS8(1)(2)364NS040
40	390,000	NT	77 x 220	29.2	29.9	6	8	ALS8(1)(2)394NT040
40	390,000	QW	90 x 169	34.3	35.4	5	7	ALS8(1)(2)394QW040
40	510,000	QS	90 x 194	35.7	36.6	5	7	ALS8(1)(2)514QS040
40	510,000	QT	90 x 220	36.1	37.0	5	7	ALS8(1)(2)514QT040
63	7,500	DA	36 x 52	7.0	10.4	56	43	ALS8(1)(2)752DA063
63	10,000	DB	36 x 62	8.2	11.7	43	34	ALS8(1)(2)103DB063
63	15,000	DE	36 x 82	10.0	13.7	30	24	ALS8(1)(2)153DE063
63	22,000	DF	36 x 105	11.5	14.7	22	18	ALS8(1)(2)223DF063
63	30,000	KE	51 x 82	13.8	16.4	20	17	ALS8(1)(2)303KE063
63	47,000	KF	51 x 105	16.4	18.7	14	13	ALS8(1)(2)473KF063
63	68,000	QC	90 x 67	18.9	20.5	14	13	ALS8(1)(2)683QC063
63	82,000	LM	63.5 x 131	23.6	26.3	9	9	ALS8(1)(2)823LM063
63	82,000	MF	66 x 105	22.7	25.2	9	9	ALS8(1)(2)823MF063
63	120,000	NF	77 x 105	23.2	24.6	9	10	ALS8(1)(2)124NF063
63	120,000	NJ	77 x 115	23.8	25.4	9	9	ALS8(1)(2)124NJ063
63	130,000	NP	77 x 146	26.0	27.8	8	9	ALS8(1)(2)134NP063
63	130,000	QH	90 x 98	26.8	28.7	8	9	ALS8(1)(2)134QH063
63	160,000	QM	90 x 131	29.9	31.8	7	8	ALS8(1)(2)164QM063
63	180,000	NW	77 x 169	27.6	29.1	7	8	ALS8(1)(2)184NW063
VDC	Rated Capacitance	Size Code	Case Size	Ripple Current		ESR	Impedance	Part Number

(1) Mounting Code: 0 = plain can, 1 = threaded mounting stud
(2) Termination Code: See Termination Tables for available options

Table 1 – Ratings & Part Number Reference cont.

VDC	Rated Capacitance	Size Code	Case Size	Ripple Current		ESR Maximum	Impedance Maximum	Part Number
	100 Hz 20°C (µF)		D x L (mm)	100 Hz 105°C (A)	10 kHz 105°C (A)	100 Hz 20°C (mΩ)	10 kHz 20°C (mΩ)	
63	200,000	QP	90 x 146	31.8	33.5	6	8	ALS8(1)(2)204QP063
63	220,000	NS	77 x 194	28.6	29.9	7	8	ALS8(1)(2)224NS063
63	240,000	NT	77 x 220	29.0	30.2	7	8	ALS8(1)(2)244NT063
63	240,000	QW	90 x 169	33.9	35.7	6	7	ALS8(1)(2)244QW063
63	300,000	QS	90 x 194	35.4	36.9	5	7	ALS8(1)(2)304QS063
63	330,000	QT	90 x 220	36.0	37.4	5	7	ALS8(1)(2)334QT063
100	3,000	DA	36 x 52	6.0	9.1	95	77	ALS8(1)(2)302DA100
100	3,600	DB	36 x 62	6.8	10.3	79	64	ALS8(1)(2)362DB100
100	5,600	DE	36 x 82	8.5	12.3	53	43	ALS8(1)(2)562DE100
100	8,200	DF	36 x 105	10.0	13.6	38	31	ALS8(1)(2)822DF100
100	12,000	KE	51 x 82	12.6	15.4	30	25	ALS8(1)(2)123KE100
100	16,000	KF	51 x 105	14.7	17.8	23	19	ALS8(1)(2)163KF100
100	24,000	QC	90 x 67	17.9	20.2	19	17	ALS8(1)(2)243QC100
100	30,000	LM	63.5 x 131	21.7	25.3	14	12	ALS8(1)(2)303LM100
100	30,000	MF	66 x 105	21.0	24.3	14	12	ALS8(1)(2)303MF100
100	43,000	NF	77 x 105	22.0	24.2	13	12	ALS8(1)(2)433NF100
100	43,000	NJ	77 x 115	22.6	24.9	12	12	ALS8(1)(2)433NJ100
100	51,000	NP	77 x 146	24.7	27.0	11	10	ALS8(1)(2)513NP100
100	51,000	QH	90 x 98	25.2	27.6	11	11	ALS8(1)(2)513QH100
100	62,000	QM	90 x 131	28.3	30.8	9	10	ALS8(1)(2)623QM100
100	68,000	NW	77 x 169	26.5	28.4	9	9	ALS8(1)(2)683NW100
100	75,000	QP	90 x 146	30.3	32.7	8	9	ALS8(1)(2)753QP100
100	82,000	NS	77 x 194	27.6	29.4	8	9	ALS8(1)(2)823NS100
100	91,000	NT	77 x 220	28.0	29.7	8	9	ALS8(1)(2)913NT100
100	91,000	QW	90 x 169	32.6	34.9	7	8	ALS8(1)(2)913QW100
100	110,000	QS	90 x 194	34.1	36.2	6	8	ALS8(1)(2)114QS100
100	120,000	QT	90 x 220	34.7	36.7	6	8	ALS8(1)(2)124QT100
200	1,100	DA	36 x 52	3.3	6.5	236	159	ALS8(1)(2)112DA200
200	1,400	DB	36 x 62	3.9	7.5	186	126	ALS8(1)(2)142DB200
200	2,000	DE	36 x 82	4.8	9.1	131	89	ALS8(1)(2)202DE200
200	3,000	DF	36 x 105	6.0	10.6	90	61	ALS8(1)(2)302DF200
200	4,300	KE	51 x 82	7.9	12.1	70	49	ALS8(1)(2)432KE200
200	6,200	KF	51 x 105	9.6	14.4	49	35	ALS8(1)(2)622KF200
200	9,100	QC	90 x 67	12.2	15.8	41	31	ALS8(1)(2)912QC200
200	11,000	LM	63.5 x 131	14.6	20.6	29	21	ALS8(1)(2)113LM200
200	11,000	MF	66 x 105	14.1	19.9	30	22	ALS8(1)(2)113MF200
200	16,000	NF	77 x 105	15.8	19.9	25	19	ALS8(1)(2)163NF200
200	16,000	NJ	77 x 115	16.2	20.5	25	19	ALS8(1)(2)163NJ200
200	18,000	QH	90 x 98	18.0	22.8	22	17	ALS8(1)(2)183QH200
200	20,000	NP	77 x 146	18.2	22.5	21	16	ALS8(1)(2)203NP200
200	22,000	QM	90 x 131	20.6	25.7	18	15	ALS8(1)(2)223QM200
200	24,000	NW	77 x 169	19.9	24.4	18	14	ALS8(1)(2)243NW200
200	27,000	QP	90 x 146	22.5	27.6	16	13	ALS8(1)(2)273QP200
200	30,000	NS	77 x 194	21.4	25.7	15	12	ALS8(1)(2)303NS200
200	33,000	NT	77 x 220	22.1	26.2	14	12	ALS8(1)(2)333NT200
200	33,000	QW	90 x 169	24.7	30.0	13	11	ALS8(1)(2)333QW200
200	43,000	QS	90 x 194	27.0	31.8	11	10	ALS8(1)(2)433QS200
200	43,000	QT	90 x 220	27.4	32.5	11	10	ALS8(1)(2)433QT200
250	750	DA	36 x 52	3.0	6.4	267	169	ALS8(1)(2)751DA250
250	1,000	DB	36 x 62	3.6	7.4	202	128	ALS8(1)(2)102DB250
250	1,500	DE	36 x 82	4.6	9.2	136	87	ALS8(1)(2)152DE250
250	2,200	DF	36 x 105	5.6	10.7	94	61	ALS8(1)(2)222DF250
250	3,000	KE	51 x 82	7.3	12.0	76	51	ALS8(1)(2)302KE250
250	4,300	KF	51 x 105	8.9	14.3	54	36	ALS8(1)(2)432KF250
250	6,800	QC	90 x 67	11.7	15.6	42	30	ALS8(1)(2)682QC250
250	7,500	LM	63.5 x 131	13.6	20.6	32	22	ALS8(1)(2)752LM250
250	7,500	MF	66 x 105	13.2	19.8	32	22	ALS8(1)(2)752MF250
VDC	Rated Capacitance	Size Code	Case Size	Ripple Current		ESR	Impedance	Part Number

(1) Mounting Code: 0 = plain can, 1 = threaded mounting stud
(2) Termination Code: See Termination Tables for available options

Table 1 – Ratings & Part Number Reference cont.

VDC	Rated Capacitance	Size Code	Case Size	Ripple Current		ESR Maximum	Impedance Maximum	Part Number
	100 Hz 20°C (µF)		D x L (mm)	100 Hz 105°C (A)	10 kHz 105°C (A)	100 Hz 20°C (mΩ)	10 kHz 20°C (mΩ)	
250	11,000	NF	77 x 105	15.1	19.9	27	19	ALS8(1)(2)113NF250
250	11,000	NJ	77 x 115	15.4	20.5	26	19	ALS8(1)(2)113NJ250
250	13,000	NP	77 x 146	17.2	22.6	23	16	ALS8(1)(2)133NP250
250	13,000	QH	90 x 98	17.2	22.7	23	17	ALS8(1)(2)133QH250
250	16,000	NW	77 x 169	18.8	24.4	19	14	ALS8(1)(2)163NW250
250	16,000	QM	90 x 131	19.8	25.5	19	14	ALS8(1)(2)163QM250
250	18,000	QP	90 x 146	21.4	27.7	17	13	ALS8(1)(2)183QP250
250	22,000	NS	77 x 194	20.9	25.8	15	12	ALS8(1)(2)223NS250
250	22,000	NT	77 x 220	21.1	26.2	15	12	ALS8(1)(2)223NT250
250	24,000	QW	90 x 169	23.9	29.9	14	11	ALS8(1)(2)243QW250
250	30,000	QS	90 x 194	26.0	31.8	12	10	ALS8(1)(2)303QS250
250	30,000	QT	90 x 220	26.4	32.5	11	10	ALS8(1)(2)303QT250
350	510	DA	36 x 52	2.7	6.4	292	169	ALS8(1)(2)511DA350
350	620	DB	36 x 62	3.1	7.3	240	139	ALS8(1)(2)621DB350
350	1,000	DE	36 x 82	4.1	9.2	151	88	ALS8(1)(2)102DE350
350	1,300	DF	36 x 105	4.7	10.2	117	68	ALS8(1)(2)132DF350
350	2,000	KE	51 x 82	6.7	12.0	84	51	ALS8(1)(2)202KE350
350	3,000	KF	51 x 105	8.4	14.3	58	35	ALS8(1)(2)302KF350
350	4,300	QC	90 x 67	10.6	15.8	49	31	ALS8(1)(2)432QC350
350	5,100	LM	63.5 x 131	12.3	20.6	36	22	ALS8(1)(2)512LM350
350	5,100	MF	66 x 105	12.0	19.8	36	22	ALS8(1)(2)512MF350
350	7,500	NF	77 x 105	14.0	19.9	29	19	ALS8(1)(2)752NF350
350	7,500	NJ	77 x 115	14.3	20.5	29	19	ALS8(1)(2)752NJ350
350	9,100	NP	77 x 146	16.0	22.6	25	16	ALS8(1)(2)912NP350
350	9,100	QH	90 x 98	16.0	22.5	25	16	ALS8(1)(2)912QH350
350	10,000	QM	90 x 131	18.0	25.8	22	14	ALS8(1)(2)103QM350
350	11,000	NW	77 x 169	17.5	24.4	21	14	ALS8(1)(2)113NW350
350	12,000	QP	90 x 146	19.7	27.8	19	13	ALS8(1)(2)123QP350
350	13,000	NS	77 x 194	18.7	25.6	18	12	ALS8(1)(2)133NS350
350	15,000	NT	77 x 220	19.8	26.1	17	12	ALS8(1)(2)153NT350
350	15,000	QW	90 x 169	21.9	30.0	16	11	ALS8(1)(2)153QW350
350	20,000	QS	90 x 194	24.4	31.8	13	10	ALS8(1)(2)203QS350
350	20,000	QT	90 x 220	24.6	32.4	13	9	ALS8(1)(2)203QT350
400	430	DA	36 x 52	2.6	6.4	308	173	ALS8(1)(2)431DA400
400	560	DB	36 x 62	3.0	7.4	237	133	ALS8(1)(2)561DB400
400	820	DE	36 x 82	3.8	9.1	163	92	ALS8(1)(2)821DE400
400	1,200	DF	36 x 105	4.7	10.6	113	64	ALS8(1)(2)122DF400
400	1,600	KE	51 x 82	6.2	12.0	92	53	ALS8(1)(2)162KE400
400	2,400	KF	51 x 105	7.8	14.2	63	37	ALS8(1)(2)242KF400
400	3,600	QC	90 x 67	10.3	15.7	50	31	ALS8(1)(2)362QC400
400	4,300	LM	63.5 x 131	11.9	20.5	38	22	ALS8(1)(2)432LM400
400	4,300	MF	66 x 105	11.6	19.8	38	22	ALS8(1)(2)432MF400
400	6,200	NF	77 x 105	13.5	19.8	31	19	ALS8(1)(2)622NF400
400	6,200	NJ	77 x 115	13.8	20.5	30	19	ALS8(1)(2)622NJ400
400	7,500	NP	77 x 146	15.5	22.5	26	16	ALS8(1)(2)752NP400
400	7,500	QH	90 x 98	15.5	22.5	26	16	ALS8(1)(2)752QH400
400	8,200	QM	90 x 131	17.4	25.8	23	14	ALS8(1)(2)822QM400
400	9,100	NW	77 x 169	17.0	24.3	22	14	ALS8(1)(2)912NW400
400	10,000	QP	90 x 146	19.2	27.7	19	12	ALS8(1)(2)103QP400
400	12,000	NS	77 x 194	18.9	25.7	18	12	ALS8(1)(2)123NS400
400	12,000	NT	77 x 220	19.0	26.1	17	12	ALS8(1)(2)123NT400
400	13,000	QW	90 x 169	21.6	29.9	16	11	ALS8(1)(2)133QW400
400	16,000	QS	90 x 194	23.5	31.8	13	10	ALS8(1)(2)163QS400
400	16,000	QT	90 x 220	23.7	32.4	13	9	ALS8(1)(2)163QT400
450	360	DA	36 x 52	2.4	6.1	427	262	ALS8(1)(2)361DA450
450	470	DB	36 x 62	2.8	7.1	328	202	ALS8(1)(2)471DB450
450	680	DE	36 x 82	3.5	8.7	228	140	ALS8(1)(2)681DE450
VDC	Rated Capacitance	Size Code	Case Size	Ripple Current		ESR	Impedance	Part Number

(1) Mounting Code: 0 = plain can, 1 = threaded mounting stud
(2) Termination Code: See Termination Tables for available options

Table 1 – Ratings & Part Number Reference cont.

VDC	Rated Capacitance	Size Code	Case Size	Ripple Current		ESR Maximum	Impedance Maximum	Part Number
	100 Hz 20°C (µF)		D x L (mm)	100 Hz 105°C (A)	10 kHz 105°C (A)	100 Hz 20°C (mΩ)	10 kHz 20°C (mΩ)	
450	1,000	DF	36 x 105	4.4	10.1	157	97	ALS8(1)(2)102DF450
450	1,300	KE	51 x 82	5.7	11.6	128	80	ALS8(1)(2)132KE450
450	2,000	KF	51 x 105	7.3	13.9	85	54	ALS8(1)(2)202KF450
450	2,700	QC	90 x 67	9.7	15.7	66	43	ALS8(1)(2)272QC450
450	3,300	LM	63.5 x 131	11.3	20.2	49	31	ALS8(1)(2)332LM450
450	3,300	MF	66 x 105	10.9	19.5	50	31	ALS8(1)(2)332MF450
450	4,700	NF	77 x 105	12.9	19.8	39	26	ALS8(1)(2)472NF450
450	5,100	NJ	77 x 115	13.5	20.2	37	25	ALS8(1)(2)512NJ450
450	5,600	NP	77 x 146	14.7	22.4	33	22	ALS8(1)(2)562NP450
450	5,600	QH	90 x 98	14.7	22.5	33	22	ALS8(1)(2)562QH450
450	6,800	QM	90 x 131	17.0	25.4	28	19	ALS8(1)(2)682QM450
450	7,500	NW	77 x 169	16.7	24.2	26	18	ALS8(1)(2)752NW450
450	8,200	QP	90 x 146	18.7	27.4	24	16	ALS8(1)(2)822QP450
450	9,100	NS	77 x 194	18.1	25.5	22	15	ALS8(1)(2)912NS450
450	10,000	NT	77 x 220	18.8	26.1	21	14	ALS8(1)(2)103NT450
450	10,000	QW	90 x 169	20.7	29.8	20	14	ALS8(1)(2)103QW450
450	13,000	QS	90 x 194	23.0	31.6	16	12	ALS8(1)(2)133QS450
450	13,000	QT	90 x 220	23.3	32.3	16	11	ALS8(1)(2)133QT450
500	300	DA	36 x 52	2.2	5.2	706	522	ALS8(1)(2)301DA500
500	360	DB	36 x 62	2.5	5.9	589	435	ALS8(1)(2)361DB500
500	560	DE	36 x 82	3.3	7.5	380	281	ALS8(1)(2)561DE500
500	820	DF	36 x 105	4.1	8.9	261	194	ALS8(1)(2)821DF500
500	1,200	KE	51 x 82	5.7	10.8	189	141	ALS8(1)(2)122KE500
500	1,600	KF	51 x 105	6.8	12.8	142	106	ALS8(1)(2)162KF500
500	2,400	QC	90 x 67	9.4	14.9	98	74	ALS8(1)(2)242QC500
500	2,700	LM	63.5 x 131	10.5	18.8	80	60	ALS8(1)(2)272LM500
500	2,700	MF	66 x 105	10.2	18.2	81	60	ALS8(1)(2)272MF500
500	3,900	NF	77 x 105	12.2	19.0	61	46	ALS8(1)(2)392NF500
500	4,300	NJ	77 x 115	12.9	19.4	56	43	ALS8(1)(2)432NJ500
500	4,700	QH	90 x 98	14.1	21.6	51	38	ALS8(1)(2)472QH500
500	5,100	NP	77 x 146	14.4	21.5	48	36	ALS8(1)(2)512NP500
500	5,600	QM	90 x 131	16.2	24.5	43	32	ALS8(1)(2)562QM500
500	6,200	NW	77 x 169	15.9	23.3	40	30	ALS8(1)(2)622NW500
500	6,800	QP	90 x 146	17.8	26.4	36	27	ALS8(1)(2)682QP500
500	7,500	NS	77 x 194	17.2	24.7	33	26	ALS8(1)(2)752NS500
500	8,200	NT	77 x 220	17.9	25.2	31	24	ALS8(1)(2)822NT500
500	8,200	QW	90 x 169	19.7	28.8	30	23	ALS8(1)(2)822QW500
500	11,000	QS	90 x 194	22.2	30.8	24	18	ALS8(1)(2)113QS500
500	11,000	QT	90 x 220	22.4	31.4	23	18	ALS8(1)(2)113QT500
VDC	**Rated Capacitance**	**Size Code**	**Case Size**	**Ripple Current**		**ESR**	**Impedance**	**Part Number**

(1) Mounting Code: 0 = plain can, 1 = threaded mounting stud
(2) Termination Code: See Termination Tables for available options

Mechanical Data

Polarity and Reversed Voltage

Aluminium Electrolytic capacitors manufactured for use in DC applications contain an anode foil and a cathode foil. As such, they are polarized devices and must be connected with the +ve to the anode foil and the -ve to the cathode foil. If this were to be reversed then the electrolytic process that took place in forming the oxide layer on the anode would be recreated in trying to form an oxide layer on the cathode. In forming the cathode foil in this way, heat would be generated and gas given off within the capacitor, usually leading to catastrophic failure.

The cathode foil already possesses a thin stabilized oxide layer. This thin oxide layer is equivalent to a forming voltage of approximately 2 V. As a result, the capacitor can withstand a voltage reversal of up to 2 V for short periods. Above this voltage, the formation process will commence. Aluminium Electrolytic capacitors can also be manufactured for use in intermittent AC applications by using two anode foils in place of one anode and one cathode.

Mounting Position

The capacitor can be mounted in any position as long as the safety vent can operate. It is possible for some electrolyte to be expelled. As this is a conducting liquid, suitable precautions should be initiated by the system designer to avoid secondary short circuits.
The capacitors are designed to be mounted in free air and are not suitable for submersion in liquid.

Insulating Resistance

≥ 100 MΩ at 100 VDC across insulating sleeve.

Voltage Proof

≥ 3,500 VDC across insulating Sleeve
≥ 2,500 VDC across insulating sleeve

Safety Vent

A safety vent for overpressure is featured on terminal deck. This is in the form of a rubber plug designed to relieve build-up of internal pressure due to overstress or catastrophic failure.

Marking

NOTE: Print can be gold or white. Image for reference only.

Construction

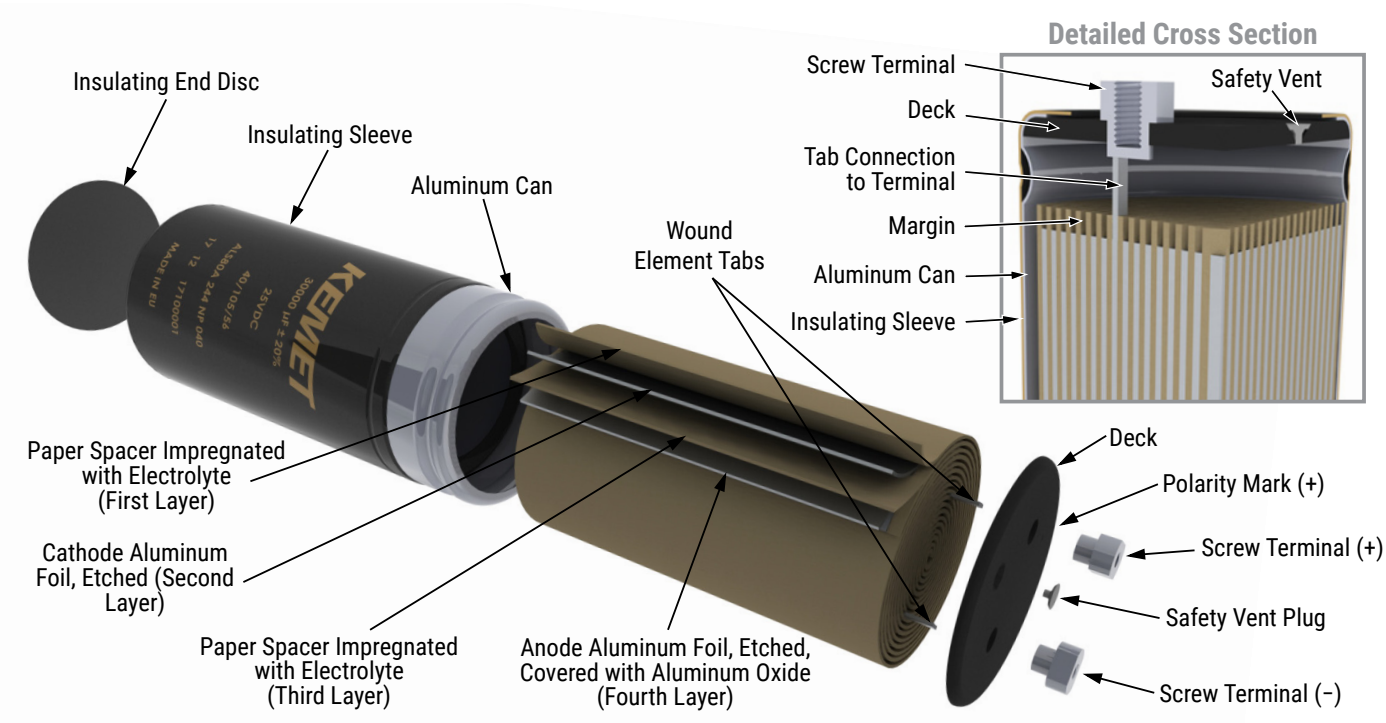

Construction Data

The manufacturing process begins with the anode foil being electrochemically etched to increase the surface area and then "formed" to produce the aluminum oxide layer. Both the anode and cathode foils are then interleaved with absorbent paper and wound into a cylinder. During the winding process, aluminum tabs are attached to each foil to provide the electrical contact.

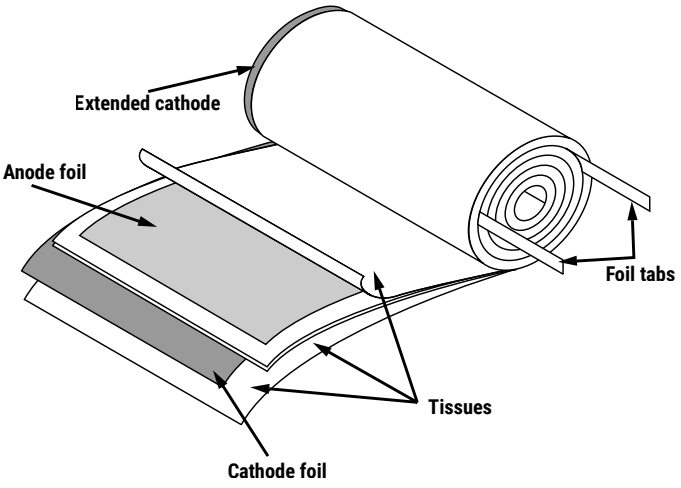

The deck, complete with terminals, is attached to the tabs and then folded down to rest on top of the winding. The complete winding is impregnated with electrolyte before being housed in a suitable container, usually an aluminum can, and sealed. Throughout the process, all materials inside the housing must be maintained at the highest purity and be compatible with the electrolyte.

Each capacitor is aged and tested before being sleeved and packed. The purpose of aging is to repair any damage in the oxide layer and thus reduce the leakage current to a very low level. Aging is normally carried out at the rated temperature of the capacitor and is accomplished by applying voltage to the device while carefully controlling the supply current. The process may take several hours to complete.

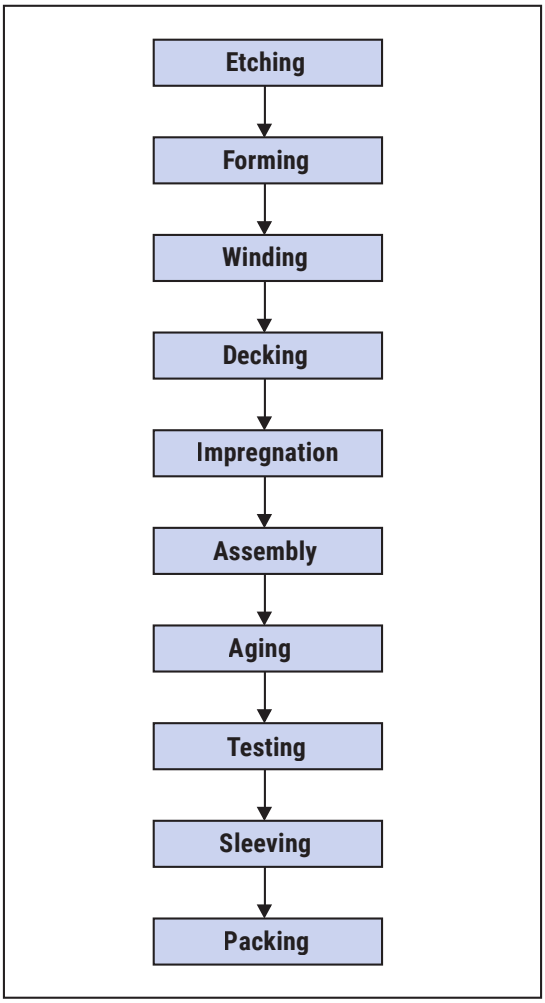

Damage to the oxide layer can occur due to variety of reasons:
- Slitting of the anode foil after forming
- Attaching the tabs to the anode foil
- Minor mechanical damage caused during winding

A sample from each batch is taken by the quality department after completion of the production process. This sample size is controlled by the use of recognized sampling tables defined in BS 6001.

The following tests are applied and may be varied at the request of the customer. In this case the batch, or special procedure, will determine the course of action.

Electrical:
- Leakage current
- Capacitance
- ESR
- Impedance
- Tan Delta

Mechanical/Visual:
- Overall dimensions
- Torque test of mounting stud
- Print detail
- Box labels
- Packaging, including packed quantity

KEMET Electronics Corporation Sales Offices

For a complete list of our global sales offices, please visit www.kemet.com/sales.

Disclaimer

YAGEO Corporation and its affiliates do not recommend the use of commercial or automotive grade products for high reliability applications or manned space flight.

All product specifications, statements, information and data (collectively, the "Information") in this datasheet are subject to change. The customer is responsible for checking and verifying the extent to which the Information contained in this publication is applicable to an order at the time the order is placed. All Information given herein is believed to be accurate and reliable, but it is presented without guarantee, warranty, or responsibility of any kind, expressed or implied.

Statements of suitability for certain applications are based on KEMET Electronics Corporation's ("KEMET") knowledge of typical operating conditions for such applications, but are not intended to constitute – and KEMET specifically disclaims – any warranty concerning suitability for a specific customer application or use. The Information is intended for use only by customers who have the requisite experience and capability to determine the correct products for their application. Any technical advice inferred from this Information or otherwise provided by KEMET with reference to the use of KEMET's products is given gratis, and KEMET assumes no obligation or liability for the advice given or results obtained.

Although KEMET designs and manufactures its products to the most stringent quality and safety standards, given the current state of the art, isolated component failures may still occur. Accordingly, customer applications which require a high degree of reliability or safety should employ suitable designs or other safeguards (such as installation of protective circuitry or redundancies) in order to ensure that the failure of an electrical component does not result in a risk of personal injury or property damage.

Although all product–related warnings, cautions and notes must be observed, the customer should not assume that all safety measures are indicated or that other measures may not be required.

KEMET requires its products to be packaged and shipped on pallets. This is because KEMET's products are specifically designed to be packed onto pallets during shipment. If for any reason, the products are removed from pallets by the shipping party and shipped to the end customer, then additional external protection is required. In this instance, an external box with two carton layers and an upwards orientation sticker must be used by the shipping party, with the empty space filled with filling material, and afterwards sealing the box. If this packing and packaging guideline is not followed by the shipping party, the shipping party, and not KEMET, will be held responsible for any packaging, packing and/or product damages upon delivery of the products to the end customer. KEMET hereby disclaims any liability for damages to the products or otherwise that have been, or threaten to be, inflicted, result from or are in any way related to the packaging, packing or damage by the shipping party in contravention of the packing and packaging guidelines herein.

KEMET is a registered trademark of KEMET Electronics Corporation.