ALF80, +105°C

Overview

The KEMET ALF80 Press-Fit capacitors eliminate the need for solder, and therefore, the associated production and quality issues. They are the next evolution of snap-in capacitors, providing reliable electrical contact and the same vibration performance as soldered snap-in terminals. The ALF80 High CV capacitors offer high performance and reliability in a wide range of case sizes and voltage ratings featuring high ripple currents and long-life performance. Volumetric efficiency ensures the maximum capacitance capability in a smaller size.

Applications

Typical applications for the ALF80 capacitor include inverters, frequency converters, motor drives, motor control, UPS systems, smoothing, energy storage, alternative energy, charging stations, traction, demanding power supplies (SMPS), welding, and HVAC.

Benefits

- Eliminates the manufacturing problems of soldering onto thick PCB copper tracks, which act as heat-sinks
- Eliminates fractured solder joints/cold-solder
- Skipping the solder operation allows for easy insertion after the production washing process
- Capability to exchange components in the field

In addition to solving the solder issues, the ALF80 Press-Fit offers:

- Maximum capacitance capability
- 35, 40, 45, and 50 mm diameters with 4 or 5 pin configuration
- Long life, up to 9,000 hours at +105°C (Vr, Ir applied)
- High ripple current
- Excellent surge voltage capability
- PET sleeve and Lexan disc are recognized to UL: QMTR2, UL No. E358957 *(Other options available upon request)*
- Optimized designs available upon request

Part Number System

ALF80	C	331	DF	500	
Series	Termination	Capacitance Code (µF)	Size Code	Rated Voltage (VDC)	
Press-Fit Type Aluminum Electrolytic	See Termination Table	First two digits represent significant figures. Third digit specifies number of zeros.	See Dimension Table	025 = 25 040 = 40 063 = 63 100 = 100 200 = 200	250 = 250 350 = 350 400 = 400 450 = 450 500 = 500

© KEMET Electronics Corporation • One East Broward Boulevard
Fort Lauderdale, FL 33301 USA • 954-766-2800 • www.kemet.com

Performance Characteristics

Item	Performance Characteristics		
Capacitance Range	200 – 240,000 µF		
Rated Voltage	25 – 500 VDC		
Operating Temperature	−40 to +105°C		
Storage Temperature Range	−55 to +105°C		
Capacitance Tolerance	±20% at 100 Hz/+20°C		
Operational Lifetime	D (mm)	Rated Voltage and Ripple Current at +105°C (hours)	Rated Voltage at +105°C (hours)
	35	8,000	13,000
	40 – 50	9,000	14,000
End of Life Requirement	40 < V_R ≤ 160 VDC Δ C/C < ±20% V_R > 160 VDC Δ C/C < ±15% ESR < 3X ESR Limit, IL < initial specified limit		
Shelf Life	2,000 hours at +85°C or 30,000 hours at +40°C 0 VDC		
Leakage Current	I = 0.003 CV or 6,000 µA (whichever is smaller)		
	C = rated capacitance (µF), V = rated voltage (VDC). Voltage applied for 5 minutes at +20°C.		
Vibration Test Specifications		Procedure	Requirements
	D ≤ 40 mm	0.75 mm displacement amplitude or 10 G maximum acceleration. Vibration applied for three directions 2-hour sessions at 10 – 500 Hz. (Capacitor clamped by body)	No leakage of electrolyte or other visible damage. Deviations in capacitance from initial measurements must not exceed Δ C/C ±5%
	D > 40 mm	0.35 mm displacement amplitude or 5 G maximum acceleration. Vibration applied for three directions 0.5-hour sessions at 10 – 55 Hz. (Capacitor clamped by body)	
Standards	IEC 60384–4 long life grade 40/105/56		

Surge Voltage

Test Condition	Voltage (VDC)									
	25	40	63	100	200	250	350	400	450	500
≤ 30 second surge followed by a no load period of 330 seconds, 1,000 cycles at +105°C	28.75	46	72.5	115	230	288	385	440	495	550

Test Method & Performance

Endurance Life Test		
Conditions	Performance	
Temperature	+105°C	
Test Duration	2,000 hours	
Ripple Current	Rated ripple current specified in table	
Voltage	The sum of DC voltage and the peak AC voltage must not exceed the rated voltage of the capacitor	
Performance	**The following specifications will be satisfied when the capacitor is tested at +20°C:**	
Capacitance Change	≤ 160 V	Within 15% of the initial value
	> 160 V	Within 10% of the initial value
Equivalent Series Resistance	Does not exceed 150% of the initial value	
Leakage Current	Does not exceed leakage current limit	

Dimensions – Millimeters

Size Code	Dimensions in mm D −0/+1	Dimensions in mm L ±2	Safety Vent Construction	Approximate Weight Grams
DB	35	30	Base Vent	50
DC	35	35		60
DD	35	40		65
DE	35	45		75
DF	35	50		80
DG	35	55		85
DH	35	60		90
DL	35	80		115
EB	40	30		55
EC	40	35		65
ED	40	40		85
EE	40	45		100
EF	40	50		105
EG	40	55		115
EH	40	60		125
EJ	40	70		145
EL	40	80		165
EM	40	90		180
EN	40	100		195
Note: Dimensions include sleeving				

Size Code	Dimensions in mm D −0/+1	Dimensions in mm L ±2	Safety Vent Construction	Approximate Weight Grams
FB	45	30	Side Vent	75
FC	45	35		85
FD	45	40		100
FE	45	45		115
FF	45	50		125
FG	45	55		135
FH	45	60		155
FL	45	80		185
FP	45	105		225
KB	50	30		95
KC	50	35		115
KD	50	40		130
KE	50	45		145
KF	50	50		160
KG	50	55		180
KH	50	60		200
KL	50	80		265
KP	50	105		310
Note: Dimensions include sleeving				

Termination Tables

Termination Code Diameter (mm)	C (4 Pin) LL = 5.5 ±1	G (5 Pin) LL = 5.5 ±1
35	•	
40	•	•
45	•	•
50	•	•
Dimensions in mm		
Mounting: These capacitors are designed to be mounted by their terminations alone and may be used in any position. Dummy pins must be isolated on 4 and 5 pin styles.		

Style C

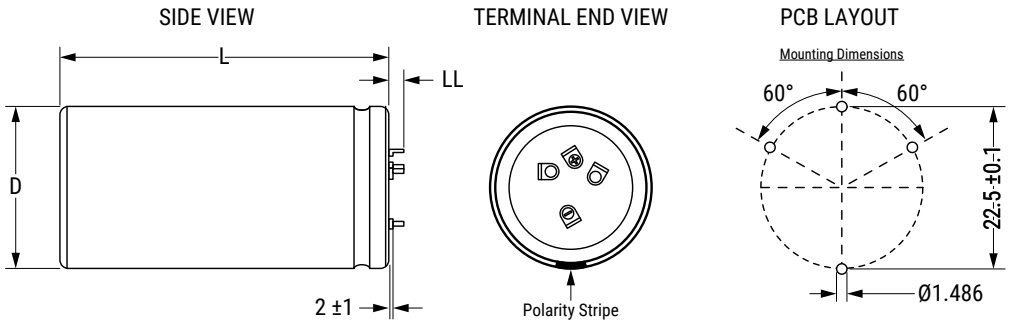

Style G

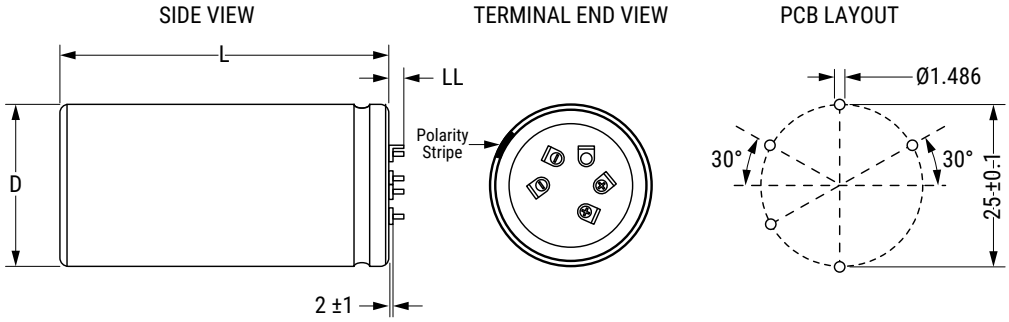

PCB Thickness: 1.57 mm Minimum	
DRILL	Ø1.613 ±0.025
COPPER THICKNESS	0.025 minimum
FINAL PLATED THROUGH-HOLE DIAMETER	Ø1.486 ±0.076
Pin Insertion Force: 125 N (28 lbf) maximum Pin Retention Force: 62 N (14 lbf) minimum	

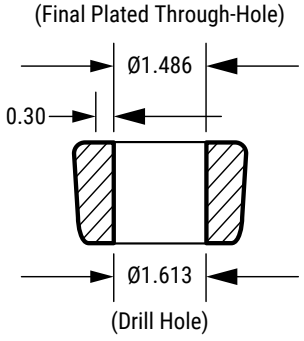

Shelf Life

The capacitance, ESR, and impedance of a capacitor will not change significantly after extended storage periods; however, the leakage current will very slowly increase. KEMET products are particularly stable and allow a shelf life in excess of three years at 40°C. See sectional specification under each product series for specific data.

Re-age (Reforming) Procedure

Apply the rated voltage to the capacitor at room temperature for a period of one hour or until the leakage current has fallen to a steady value below the specified limit. During re-aging, a maximum charging current of twice the specified leakage current or 5 mA (whichever is greater) is suggested.

Reliability

The reliability of a component can be defined as the probability that it will perform satisfactorily under a given set of conditions for a given length of time.

In practice, it is impossible to predict with absolute certainty how any individual component will perform. Therefore, we must utilize probability theory. It is also necessary to clearly define the level of stress involved (e.g., operating voltage, ripple current, temperature, and time.) Finally, the meaning of satisfactory performance must be defined by specifying a set of conditions, which determine the end of life of the component.

KEMET provides an online life calculator that can be used to predict hours of life for a given part number in specific application conditions. This can be found at: https://elc.kemet.com.

End of Life Definition

Catastrophic failure: short circuit, open circuit or safety vent operation

Parametric Failure:
- Change in capacitance > ±15%
- Leakage current > initial specified limit
- ESR > 3X ESR Limit

Table 1 – Ratings & Part Number Reference

VDC	Rated Capacitance	Size Code	Case Size	Ripple Current		ESR Maximum	Impedance Maximum	Part Number
	100 Hz 20°C (µF)		D x L (mm)	100 Hz 105°C (A)	10 kHz 105°C (A)	100 Hz 20°C (mΩ)	10 kHz 20°C (mΩ)	
25	27,000	DC	35 x 35	7.28	8.75	47	41	ALF80C273DC025
25	30,000	EB	40 x 30	6.75	7.64	49	44	ALF80(1)303EB025
25	33,000	DD	35 x 40	8.19	9.78	39	34	ALF80C333DD025
25	39,000	DE	35 x 45	9.00	10.67	33	29	ALF80C393DE025
25	47,000	DF	35 x 50	9.79	11.43	28	25	ALF80C473DF025
25	56,000	DH	35 x 60	10.93	12.70	24	21	ALF80C563DH025
25	62,000	EF	40 x 50	10.50	11.74	25	22	ALF80(1)623EF025
25	68,000	EF	40 x 50	10.50	11.59	24	22	ALF80(1)683EF025
25	82,000	EH	40 x 60	11.85	13.05	20	18	ALF80(1)823EH025
25	100,000	EJ	40 x 70	12.92	14.10	17	16	ALF80(1)104EJ025
25	110,000	EL	40 x 80	13.66	14.88	16	15	ALF80(1)114EL025
25	120,000	EL	40 x 80	13.78	14.87	15	14	ALF80(1)124EL025
25	150,000	EN	40 x 100	14.81	15.81	14	12	ALF80(1)154EN025
25	180,000	FP	45 x 105	18.82	20.45	10	9	ALF80(1)184FP025
25	220,000	KP	50 x 105	19.80	21.16	9	9	ALF80(1)224KP025
25	240,000	KP	50 x 105	20.06	21.29	9	8	ALF80(1)244KP025
40	12,000	DC	35 x 35	6.74	8.65	47	39	ALF80C123DC040
40	12,000	EB	40 x 30	6.31	7.66	53	44	ALF80(1)123EB040
40	13,000	DD	35 x 40	7.44	9.76	43	35	ALF80C133DD040
40	15,000	DE	35 x 45	8.15	10.65	37	30	ALF80C153DE040
40	18,000	DF	35 x 50	8.91	11.41	32	26	ALF80C183DF040
40	20,000	DF	35 x 50	9.10	11.36	30	25	ALF80C203DF040
40	22,000	DG	35 x 55	9.69	12.06	27	23	ALF80C223DG040
40	27,000	EF	40 x 50	9.90	11.60	26	22	ALF80(1)273EF040
40	33,000	EH	40 x 60	11.19	13.02	21	18	ALF80(1)333EH040
40	39,000	EJ	40 x 70	12.20	14.07	19	16	ALF80(1)393EJ040
40	47,000	EL	40 x 80	13.06	14.81	17	14	ALF80(1)473EL040
40	56,000	EN	40 x 100	13.94	15.62	15	13	ALF80(1)563EN040
40	68,000	FP	45 x 105	17.50	20.12	11	9	ALF80(1)683FP040
40	82,000	FP	45 x 105	18.33	20.56	10	9	ALF80(1)823FP040
40	100,000	KP	50 x 105	19.33	21.19	9	8	ALF80(1)104KP040
63	6,800	DC	35 x 35	5.80	8.08	56	42	ALF80C682DC063
63	7,500	DC	35 x 35	5.90	7.97	53	41	ALF80C752DC063
63	7,500	EB	40 x 30	5.52	6.95	60	48	ALF80(1)752EB063
63	8,200	EB	40 x 30	5.53	6.78	58	46	ALF80(1)822EB063
63	9,100	DD	35 x 40	6.68	8.96	44	34	ALF80C912DD063
63	10,000	DE	35 x 45	7.29	9.90	40	30	ALF80C103DE063
63	12,000	DF	35 x 50	7.99	10.62	34	26	ALF80C123DF063
63	15,000	DH	35 x 60	9.09	11.88	28	21	ALF80C153DH063
63	18,000	EF	40 x 50	8.82	10.54	28	23	ALF80(1)183EF063
63	22,000	EH	40 x 60	10.07	11.97	24	19	ALF80(1)223EH063
63	27,000	EJ	40 x 70	11.12	13.02	20	17	ALF80(1)273EJ063
63	30,000	EL	40 x 80	11.89	13.89	18	15	ALF80(1)303EL063
63	33,000	EL	40 x 80	12.01	13.80	18	15	ALF80(1)333EL063
63	39,000	EN	40 x 100	13.06	14.90	16	13	ALF80(1)393EN063
63	47,000	FP	45 x 105	16.50	19.48	11	9	ALF80(1)473FP063
63	51,000	FP	45 x 105	16.83	19.59	11	9	ALF80(1)513FP063
63	56,000	KP	50 x 105	17.46	20.02	11	9	ALF80(1)563KP063
63	62,000	KP	50 x 105	17.79	20.09	10	9	ALF80(1)623KP063
63	68,000	KP	50 x 105	18.03	20.09	10	9	ALF80(1)683KP063
100	2,700	DC	35 x 35	4.83	6.69	110	90	ALF80C272DC100
100	3,000	DC	35 x 35	4.94	6.65	102	84	ALF80C302DC100
100	3,000	EB	40 x 30	4.66	5.88	111	94	ALF80(1)302EB100
100	3,600	DD	35 x 40	5.60	7.53	85	70	ALF80C362DD100
100	3,900	DE	35 x 45	6.09	8.33	77	63	ALF80C392DE100
VDC	**Rated Capacitance**	**Size Code**	**Case Size**	**Ripple Current**		**ESR**	**Impedance**	**Part Number**

(1) Termination code: See Termination Tables for available options.

Table 1 – Ratings & Part Number Reference cont.

VDC	Rated Capacitance	Size Code	Case Size	Ripple Current		ESR Maximum	Impedance Maximum	Part Number
	100 Hz 20°C (µF)		D x L (mm)	100 Hz 105°C (A)	10 kHz 105°C (A)	100 Hz 20°C (mΩ)	10 kHz 20°C (mΩ)	
100	4,700	DF	35 x 50	6.73	9.03	65	54	ALF80C472DF100
100	5,600	DG	35 x 55	7.35	9.66	56	46	ALF80C562DG100
100	6,800	EF	40 x 50	7.56	9.25	52	44	ALF80(1)682EF100
100	8,200	EH	40 x 60	8.65	10.59	43	36	ALF80(1)822EH100
100	10,000	EJ	40 x 70	9.63	11.63	36	31	ALF80(1)103EJ100
100	12,000	EL	40 x 80	10.47	12.45	31	27	ALF80(1)123EL100
100	15,000	EN	40 x 100	11.60	13.59	26	22	ALF80(1)153EN100
100	18,000	FP	45 x 105	14.51	17.67	20	17	ALF80(1)183FP100
100	20,000	FP	45 x 105	14.96	17.86	18	16	ALF80(1)203FP100
100	22,000	KP	50 x 105	15.60	18.32	18	15	ALF80(1)223KP100
100	24,000	KP	50 x 105	15.90	18.40	17	15	ALF80(1)243KP100
200	910	DC	35 x 35	2.77	5.77	237	144	ALF80C911DC200
200	1,000	EB	40 x 30	2.90	5.39	228	142	ALF80(1)102EB200
200	1,200	DD	35 x 40	3.27	6.61	182	111	ALF80C122DD200
200	1,500	DF	35 x 50	3.85	7.86	145	86	ALF80C152DF200
200	1,600	DF	35 x 50	3.97	7.94	137	84	ALF80C162DF200
200	1,800	DG	35 x 55	4.30	8.52	122	73	ALF80C182DG200
200	2,200	EF	40 x 50	4.81	8.60	106	66	ALF80(1)222EF200
200	2,700	EH	40 x 60	5.53	9.82	86	54	ALF80(1)272EH200
200	3,300	EJ	40 x 70	6.26	10.84	72	44	ALF80(1)332EJ200
200	3,900	EL	40 x 80	6.90	11.67	62	39	ALF80(1)392EL200
200	4,700	EN	40 x 100	7.67	12.71	52	33	ALF80(1)472EN200
200	5,600	FP	45 x 105	9.00	16.01	42	26	ALF80(1)562FP200
200	6,800	FP	45 x 105	9.99	16.71	36	23	ALF80(1)682FP200
200	8,200	KP	50 x 105	11.15	17.54	31	20	ALF80(1)822KP200
250	620	DC	35 x 35	2.50	5.53	286	170	ALF80C621DC250
250	620	EB	40 x 30	2.54	5.21	296	178	ALF80(1)621EB250
250	680	EB	40 x 30	2.64	5.23	274	159	ALF80(1)681EB250
250	750	DD	35 x 40	2.84	6.26	237	141	ALF80C751DD250
250	820	DE	35 x 45	3.06	6.81	216	122	ALF80C821DE250
250	1,000	DF	35 x 50	3.46	7.52	178	106	ALF80C102DF250
250	1,200	DG	35 x 55	3.86	8.19	150	86	ALF80C122DG250
250	1,500	EF	40 x 50	4.41	8.39	126	77	ALF80(1)152EF250
250	1,800	EH	40 x 60	5.02	9.57	105	64	ALF80(1)182EH250
250	2,200	EJ	40 x 70	5.70	10.60	87	51	ALF80(1)222EJ250
250	2,700	EL	40 x 80	6.42	11.50	72	45	ALF80(1)272EL250
250	3,300	EN	40 x 100	7.22	12.62	60	36	ALF80(1)332EN250
250	3,900	FP	45 x 105	8.42	15.83	49	29	ALF80(1)392FP250
250	4,300	FP	45 x 105	8.89	16.22	45	28	ALF80(1)432FP250
250	4,700	KP	50 x 105	9.52	16.86	42	25	ALF80(1)472KP250
250	5,600	KP	50 x 105	10.40	17.38	37	23	ALF80(1)562KP250
350	360	DC	35 x 35	2.04	5.36	381	201	ALF80C361DC350
350	390	EB	40 x 30	2.16	5.17	364	195	ALF80(1)391EB350
350	430	DD	35 x 40	2.30	6.05	319	168	ALF80C431DD350
350	470	DD	35 x 40	2.41	6.18	294	140	ALF80C471DD350
350	560	DE	35 x 45	2.70	6.87	247	118	ALF80C561DE350
350	620	DF	35 x 50	2.91	7.42	223	118	ALF80C621DF350
350	680	DG	35 x 55	3.11	7.91	203	97	ALF80C681DG350
350	820	EF	40 x 50	3.54	8.25	175	94	ALF80(1)821EF350
350	1,000	EH	40 x 60	4.06	9.38	143	70	ALF80(1)102EH350
350	1,100	EH	40 x 60	4.26	9.52	132	71	ALF80(1)112EH350
350	1,200	EJ	40 x 70	4.57	10.35	120	59	ALF80(1)122EJ350
350	1,500	EL	40 x 80	5.22	11.29	98	49	ALF80(1)152EL350
350	1,600	EL	40 x 80	5.40	11.41	92	51	ALF80(1)162EL350
350	1,800	EN	40 x 100	5.81	12.27	82	41	ALF80(1)182EN350
VDC	Rated Capacitance	Size Code	Case Size	Ripple Current		ESR	Impedance	Part Number

(1) Termination code: See Termination Tables for available options

Table 1 – Ratings & Part Number Reference cont.

VDC	Rated Capacitance	Size Code	Case Size	Ripple Current		ESR Maximum	Impedance Maximum	Part Number
	100 Hz 20°C (µF)		D x L (mm)	100 Hz 105°C (A)	10 kHz 105°C (A)	100 Hz 20°C (mΩ)	10 kHz 20°C (mΩ)	
350	2,200	FP	45 x 105	6.81	15.31	66	32	ALF80(1)222FP350
350	2,400	FP	45 x 105	7.19	15.72	61	33	ALF80(1)242FP350
350	2,700	FP	45 x 105	7.71	16.23	55	28	ALF80(1)272FP350
350	3,300	KP	50 x 105	8.81	17.27	47	26	ALF80(1)332KP350
400	300	DC	35 x 35	1.93	5.34	408	210	ALF80C301DC400
400	330	EB	40 x 30	2.07	5.16	384	200	ALF80(1)331EB400
400	390	DD	35 x 40	2.28	6.15	316	163	ALF80C391DD400
400	470	DE	35 x 45	2.58	6.85	263	118	ALF80C471DE400
400	510	DF	35 x 50	2.74	7.36	242	125	ALF80C511DF400
400	560	DG	35 x 55	2.93	7.85	220	99	ALF80C561DG400
400	680	EF	40 x 50	3.36	8.22	187	98	ALF80(1)681EF400
400	820	EH	40 x 60	3.82	9.33	156	71	ALF80(1)821EH400
400	910	EH	40 x 60	4.04	9.48	142	75	ALF80(1)911EH400
400	1,000	EJ	40 x 70	4.34	10.32	128	60	ALF80(1)102EJ400
400	1,200	EL	40 x 80	4.85	11.17	108	51	ALF80(1)122EL400
400	1,300	EL	40 x 80	5.07	11.34	101	54	ALF80(1)132EL400
400	1,500	EN	40 x 100	5.53	12.23	88	42	ALF80(1)152EN400
400	1,800	FP	45 x 105	6.40	15.15	71	33	ALF80(1)182FP400
400	2,200	FP	45 x 105	7.24	16.09	60	32	ALF80(1)222FP400
400	2,700	KP	50 x 105	8.32	17.17	50	27	ALF80(1)272KP400
450	240	DC	35 x 35	1.81	5.09	541	311	ALF80C241DC450
450	270	EB	40 x 30	1.96	4.99	496	288	ALF80(1)271EB450
450	300	DD	35 x 40	2.09	5.81	434	250	ALF80C301DD450
450	330	DE	35 x 45	2.25	6.32	394	205	ALF80C331DE450
450	390	DF	35 x 50	2.51	6.94	334	174	ALF80C391DF450
450	430	DF	35 x 50	2.65	7.14	304	176	ALF80C431DF450
450	470	DG	35 x 55	2.82	7.62	278	146	ALF80C471DG450
450	560	EF	40 x 50	3.20	7.97	240	140	ALF80(1)561EF450
450	680	EH	40 x 60	3.66	9.07	198	105	ALF80(1)681EH450
450	750	EH	40 x 60	3.86	9.23	181	106	ALF80(1)751EH450
450	820	EJ	40 x 70	4.14	10.03	165	88	ALF80(1)821EJ450
450	1,000	EL	40 x 80	4.67	10.92	136	73	ALF80(1)102EL450
450	1,100	EL	40 x 80	4.92	11.12	125	74	ALF80(1)112EL450
450	1,200	EN	40 x 100	5.20	11.88	114	62	ALF80(1)122EN450
450	1,500	FP	45 x 105	6.25	14.04	109	70	ALF80(1)152FP450
450	1,800	KP	50 x 105	7.13	15.27	93	57	ALF80(1)182KP450
450	2,000	KP	50 x 105	7.58	15.77	84	55	ALF80(1)202KP450
500	200	DC	35 x 35	1.71	4.40	851	589	ALF80C201DC500
500	220	EB	40 x 30	1.84	4.40	791	549	ALF80(1)221EB500
500	240	DD	35 x 40	1.93	4.97	709	491	ALF80C241DD500
500	270	DE	35 x 45	2.10	5.43	630	420	ALF80C271DE500
500	330	DF	35 x 50	2.39	6.07	517	358	ALF80C331DF500
500	390	DG	35 x 55	2.66	6.66	438	293	ALF80C391DG500
500	470	EF	40 x 50	3.04	7.12	372	259	ALF80(1)471EF500
500	560	EH	40 x 60	3.44	8.08	312	209	ALF80(1)561EH500
500	620	EH	40 x 60	3.64	8.29	283	197	ALF80(1)621EH500
500	680	EJ	40 x 70	3.91	9.00	258	173	ALF80(1)681EJ500
500	820	EL	40 x 80	4.39	9.86	215	150	ALF80(1)821EL500
500	1,000	EN	40 x 100	4.95	10.85	177	120	ALF80(1)102EN500
500	1,200	FP	45 x 105	5.64	12.44	167	119	ALF80(1)122FP500
500	1,300	FP	45 x 105	5.94	12.89	155	113	ALF80(1)132FP500
500	1,500	KP	50 x 105	6.62	13.91	136	98	ALF80(1)152KP500
500	1,600	KP	50 x 105	6.89	14.25	128	94	ALF80(1)162KP500
500	1,800	KP	50 x 105	7.38	14.81	115	83	ALF80(1)182KP500
VDC	**Rated Capacitance**	**Size Code**	**Case Size**	**Ripple Current**		**ESR**	**Impedance**	**Part Number**

(1) Termination code: See Termination Tables for available options

Environmental Compliance

All Part Numbers in this datasheet are Reach and RoHS compliant.

As an environmentally conscious company, KEMET is working continuously with improvements concerning the environmental effects of both our capacitors and their production.

In Europe (RoHS Directive) and in some other geographical areas such as China, legislation has been put in place to prevent the use of some hazardous materials, such as lead (Pb), in electronic equipment. All products in this catalog are produced to help our customers' obligations to guarantee their products and fulfill these legislative requirements. The only material of concern in our products has been lead (Pb), which has been removed from all designs to fulfill the requirement of containing less than 0.1% of lead in any homogeneous material. KEMET will closely follow any changes in legislation worldwide and make any necessary changes in its products, whenever needed.

Some customer segments such as medical, military and automotive electronics may still require the use of lead in electrode coatings. To clarify the situation and distinguish products from each other, a special symbol is used on the packaging labels for RoHS compatible capacitors.

Due to customer requirements, there may appear additional markings such as lead-free (LF), or lead-free wires (LFW) on the label.

Mechanical Data

Polarity and Reversed Voltage
Aluminium Electrolytic capacitors manufactured for use in DC applications contain an anode foil and a cathode foil. As such, they are polarized devices and must be connected with the +ve to the anode foil and the -ve to the cathode foil. If this were to be reversed then the electrolytic process that took place in forming the oxide layer on the anode would be recreated in trying to form an oxide layer on the cathode. In forming the cathode foil in this way, heat would be generated and gas given off within the capacitor, usually leading to catastrophic failure.

The cathode foil already possesses a thin stabilized oxide layer. This thin oxide layer is equivalent to a forming voltage of approximately 2 V. As a result, the capacitor can withstand a voltage reversal of up to 2 V for short periods. Above this voltage, the formation process will commence. Aluminium Electrolytic capacitors can also be manufactured for use in intermittent AC applications by using two anode foils in place of one anode and one cathode.

Mounting Position
The capacitor can be mounted upright or inclined to a horizontal position. Special attention for the safety vent coverage, which this ensures that internal gas generated can escape when the pressure reaches a certain value due to overstress or catastrophic failure. All mounting positions must allow the safety vent to work properly.

Insulating Resistance
≥ 100 MΩ at 100 VDC across insulating sleeve.

Voltage Proof
≥ 3,500 VDC across insulating sleeve.
≥ 2,500 VAC across insulating sleeve.

Safety Vent
For diameters up to 40 mm, the safety vent for overpressure is featured on the base (opposing end to the terminals), and for diameters 45 mm or higher, the safety vent is featured in the side of the can. This is a weakened area in the bottom of the can that is designed to relieve build-up of internal pressure due to overstress or catastrophic failure.

Marking

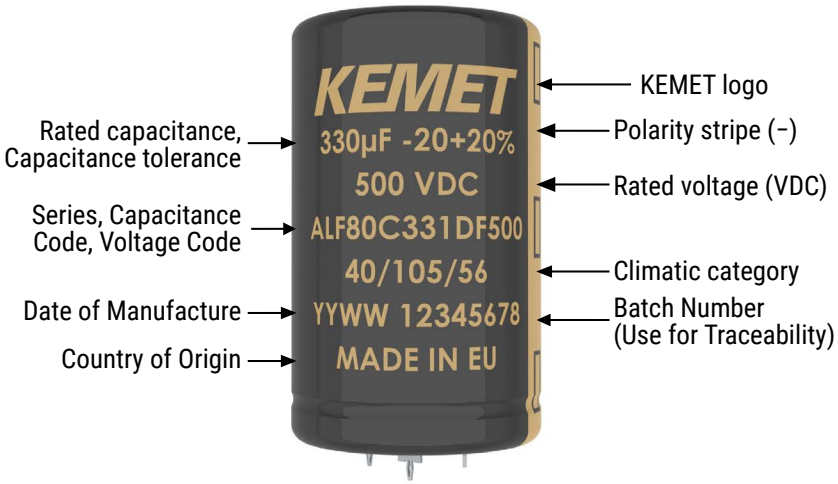

**Print shown is representative of the data included on the sleeve. Actual appearance can be continuous print style.*

Construction

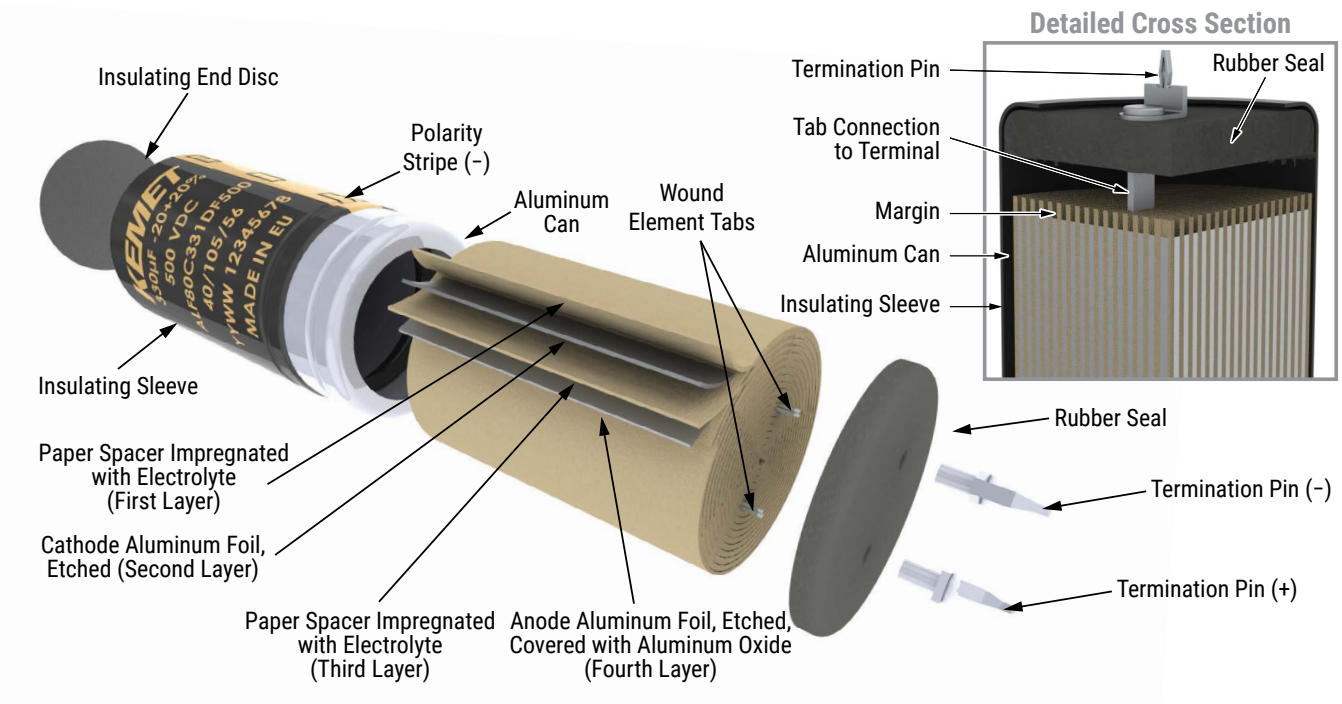

Construction Data

The manufacturing process begins with the anode foil being electrochemically etched to increase the surface area and then "formed" to produce the aluminum oxide layer. Both the anode and cathode foils are then interleaved with absorbent paper and wound into a cylinder. During the winding process, aluminum tabs are attached to each foil to provide the electrical contact.

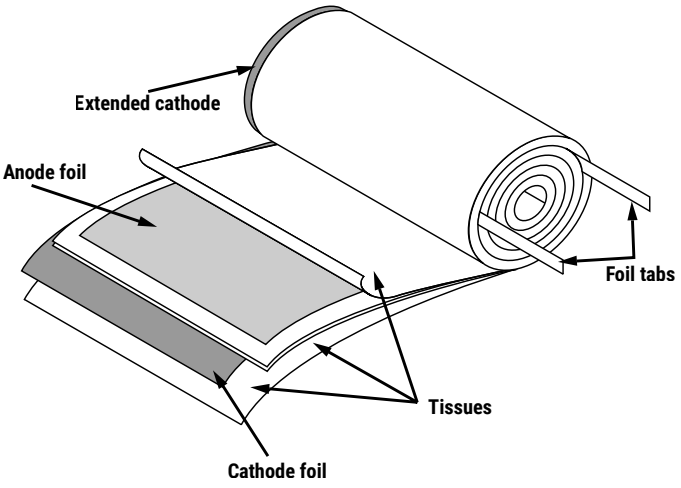

The deck, complete with terminals, is attached to the tabs and then folded down to rest on top of the winding. The complete winding is impregnated with electrolyte before being housed in a suitable container, usually an aluminum can, and sealed. Throughout the process, all materials inside the housing must be maintained at the highest purity and be compatible with the electrolyte.

Each capacitor is aged and tested before being sleeved and packed. The purpose of aging is to repair any damage in the oxide layer and thus reduce the leakage current to a very low level. Aging is normally carried out at the rated temperature of the capacitor and is accomplished by applying voltage to the device while carefully controlling the supply current. The process may take several hours to complete.

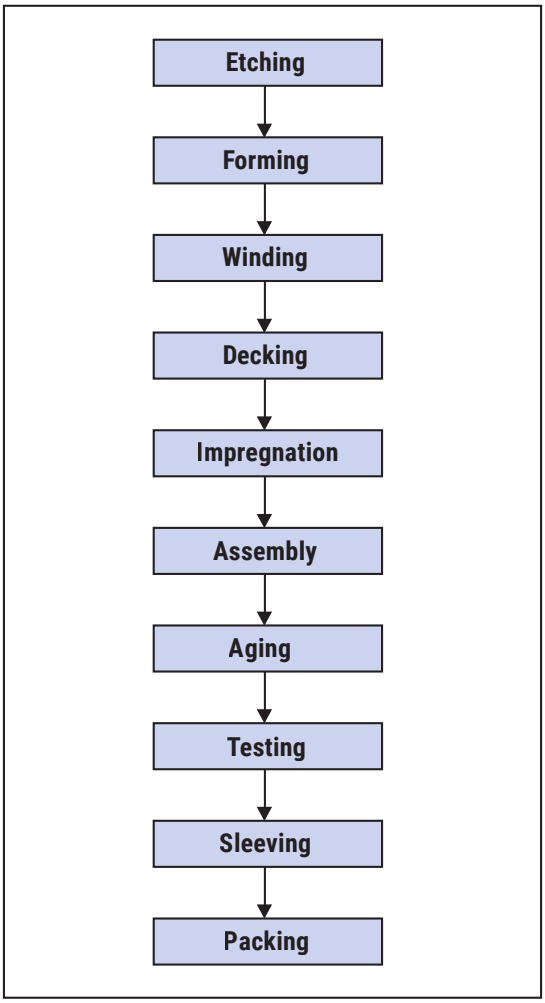

Damage to the oxide layer can occur due to variety of reasons:
- Slitting of the anode foil after forming
- Attaching the tabs to the anode foil
- Minor mechanical damage caused during winding

A sample from each batch is taken by the quality department after completion of the production process. This sample size is controlled by the use of recognized sampling tables defined in BS 6001.

The following tests are applied and may be varied at the request of the customer. In this case the batch, or special procedure, will determine the course of action.

Electrical:
- Leakage current
- Capacitance
- ESR
- Impedance
- Tan Delta

Mechanical/Visual:
- Overall dimensions
- Torque test of mounting stud
- Print detail
- Box labels
- Packaging, including packed quantity

KEMET Electronics Corporation Sales Offices

For a complete list of our global sales offices, please visit www.kemet.com/sales.

Disclaimer

YAGEO Corporation and its affiliates do not recommend the use of commercial or automotive grade products for high reliability applications or manned space flight.

All product specifications, statements, information and data (collectively, the "Information") in this datasheet are subject to change. The customer is responsible for checking and verifying the extent to which the Information contained in this publication is applicable to an order at the time the order is placed. All Information given herein is believed to be accurate and reliable, but it is presented without guarantee, warranty, or responsibility of any kind, expressed or implied.

Statements of suitability for certain applications are based on KEMET Electronics Corporation's ("KEMET") knowledge of typical operating conditions for such applications, but are not intended to constitute – and KEMET specifically disclaims – any warranty concerning suitability for a specific customer application or use. The Information is intended for use only by customers who have the requisite experience and capability to determine the correct products for their application. Any technical advice inferred from this Information or otherwise provided by KEMET with reference to the use of KEMET's products is given gratis, and KEMET assumes no obligation or liability for the advice given or results obtained.

Although KEMET designs and manufactures its products to the most stringent quality and safety standards, given the current state of the art, isolated component failures may still occur. Accordingly, customer applications which require a high degree of reliability or safety should employ suitable designs or other safeguards (such as installation of protective circuitry or redundancies) in order to ensure that the failure of an electrical component does not result in a risk of personal injury or property damage.

Although all product–related warnings, cautions and notes must be observed, the customer should not assume that all safety measures are indicated or that other measures may not be required.

KEMET requires its products to be packaged and shipped on pallets. This is because KEMET's products are specifically designed to be packed onto pallets during shipment. If for any reason, the products are removed from pallets by the shipping party and shipped to the end customer, then additional external protection is required. In this instance, an external box with two carton layers and an upwards orientation sticker must be used by the shipping party, with the empty space filled with filling material, and afterwards sealing the box. If this packing and packaging guideline is not followed by the shipping party, the shipping party, and not KEMET, will be held responsible for any packaging, packing and/or product damages upon delivery of the products to the end customer. KEMET hereby disclaims any liability for damages to the products or otherwise that have been, or threaten to be, inflicted, result from or are in any way related to the packaging, packing or damage by the shipping party in contravention of the packing and packaging guidelines herein.

KEMET is a registered trademark of KEMET Electronics Corporation.