ALC80, +105°C

Overview

The KEMET ALC80 High CV snap-in capacitors offer high performance and reliability in a wide range of case sizes and voltage ratings featuring high ripple currents and long-life performance. Volumetric efficiency ensures the maximum capacitance capability in a smaller size.

Applications

Typical applications for the ALC80 capacitor include inverters, frequency converters, motor drives, motor control, UPS systems, smoothing, energy storage, alternative energy, charging stations, traction, demanding power supplies (SMPS), welding, and HVAC.

Benefits

- Maximum capacitance capability in a smaller size
- Long life, up to 9,000 hours at +105°C (V_R, I_R applied)
- High ripple current
- Excellent surge voltage capability
- PET sleeve and Lexan disc are recognized to UL: QMTR2, UL No. E358957 *(Other options available upon request)*
- Optimized designs available upon request

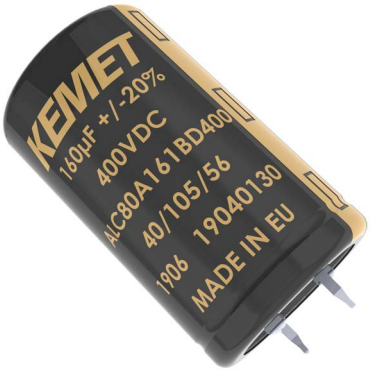

Part Number System

ALC80	A	392	BB	040	
Series	Termination	Capacitance Code (µF)	Size Code	Rated Voltage (VDC)	
Snap-In type Aluminum Electrolytic	See Termination Table	First two digits represent significant figures. Third digit specifies number of zeros.	See Dimension Table	025 = 25 040 = 40 063 = 63 100 = 100 200 = 200	250 = 250 350 = 350 400 = 400 450 = 450 500 = 500

© KEMET Electronics Corporation • One East Broward Boulevard
Fort Lauderdale, FL 33301 USA • 954-766-2800 • www.kemet.com

Performance Characteristics

Item	Performance Characteristics		
Capacitance Range	68 – 240,000 µF		
Rated Voltage	25 – 500 VDC		
Operating Temperature	−40 to +105°C		
Storage Temperature Range	−55 to +105°C		
Capacitance Tolerance	±20% at 100 Hz/+20°C		
Operational Lifetime	D (mm)	Rated Voltage and Ripple Current at +105°C (hours)	Rated Voltage at +105°C (hours)
	25	6,000	10,000
	30	7,000	11,000
	35	8,000	13,000
	40 – 50	9,000	14,000
End of Life Requirement	40 < V_R ≤ 160 VDC Δ C/C < ±20% V_R > 160 VDC Δ C/C < ±15% ESR < 3X ESR Limit, IL < initial specified limit		
Shelf Life	2,000 hours at +85°C or 30,000 hours at +40°C 0 VDC		
Leakage Current	I = 0.003 CV or 6,000 (µA, whichever is smaller)		
	C = rated capacitance (µF), V = rated voltage (VDC). Voltage applied for 5 minutes at +20°C.		
Vibration Test Specifications		Procedure	Requirements
	D ≤ 40 mm	0.75 mm displacement amplitude or 10 G maximum acceleration. Vibration applied for three directions 2-hour sessions at 10 – 500 Hz. (Capacitor clamped by body)	No leakage of electrolyte or other visible damage. Deviations in capacitance from initial measurements must not exceed: Δ C/C < 5%
	D > 40 mm	0.35 mm displacement amplitude or 5 G maximum acceleration. Vibration applied for three directions 0.5-hour sessions at 10 – 55 Hz. (Capacitor clamped by body)	
Standards	IEC 60384–4 long life grade 40/105/56		

Surge Voltage

Condition	Voltage (VDC)									
	25	40	63	100	200	250	350	400	450	500
≤ 30s Surge followed by a no load period of 330 seconds, 1,000 cycles at +105°C	28.75	46	72.5	115	230	288	385	440	495	550

Test Method & Performance

Endurance Life Test		
Conditions	Performance	
Temperature	+105°C	
Test Duration	2,000 hours	
Ripple Current	Rated ripple current in specified table	
Voltage	The sum of DC voltage and the peak AC voltage must not exceed the rated voltage of the capacitor	
Performance	**The following specifications will be satisfied when the capacitor is tested at +20°C:**	
Capacitance Change	≤ 160 V	Within 15% of the initial value
	> 160 V	Within 10% of the initial value
Equivalent Series Resistance	Does not exceed 150% of the initial limit	
Leakage Current	Does not exceed leakage current limit	

Dimensions – Millimeters

Size Code	Dimensions in mm D −0/+1	Dimensions in mm L ±2	Safety Vent Construction	Approximate Weight Grams
BB	25	30	Base Vent	28
BC	25	35		30
BD	25	40		35
CB	30	30		40
CC	30	35		45
CD	30	40		50
CE	30	45		55
CF	30	50		60
DB	35	30		50
DC	35	35		60
DD	35	40		65
DE	35	45		75
DF	35	50		80
DG	35	55		85
DH	35	60		90
DL	35	80		115
EB	40	30		55
EC	40	35		65
ED	40	40		85
EE	40	45		100
EF	40	50		105
EG	40	55		115
Note: Dimensions include sleeving				

Size Code	Dimensions in mm D −0/+1	Dimensions in mm L ±2	Safety Vent Construction	Approximate Weight Grams
EH	40	60	Base Vent	125
EJ	40	70		145
EL	40	80		165
EM	40	90		180
EN	40	100		195
FB	45	30	Side Vent	75
FC	45	35		85
FD	45	40		100
FE	45	45		115
FF	45	50		125
FG	45	55		135
FH	45	60		155
FL	45	80		185
FP	45	105		225
KB	50	30		95
KC	50	35		115
KD	50	40		130
KE	50	45		145
KF	50	50		160
KG	50	55		180
KH	50	60		200
KL	50	80		265
KP	50	105		310
Note: Dimensions include sleeving				

Termination Tables

Termination Code / Diameter (mm)	A	D	F	C	E	G	H
25	•	•	•				
30	•	•	•				
35	•	•	•	•	•		
40	•	•	•	•	•		
45				•	•	•	•
50				•	•	•	•
Mounting: These capacitors are designed to be mounted by their terminations alone and may be used in any position. Dummy pins must be isolated on 4 and 5 pin styles.							

Termination Code	Termination Style	LL ±1
Standard Termination Option		
A	2 Pin	6.3
G (D ≥ 45)	5 Pin	6.3
Other Termination Options		
D	2 Pin	4.0
F	3 Pin	4.0
C	4 Pin	6.3
E	4 Pin	4.0
H	5 Pin	4.0
Dimensions in mm		

Termination Tables cont.

Style A/D

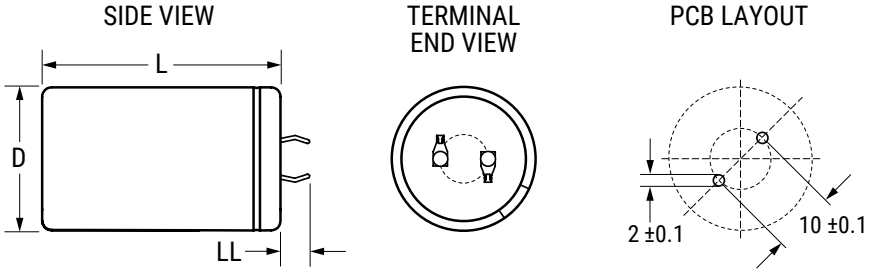

Style F

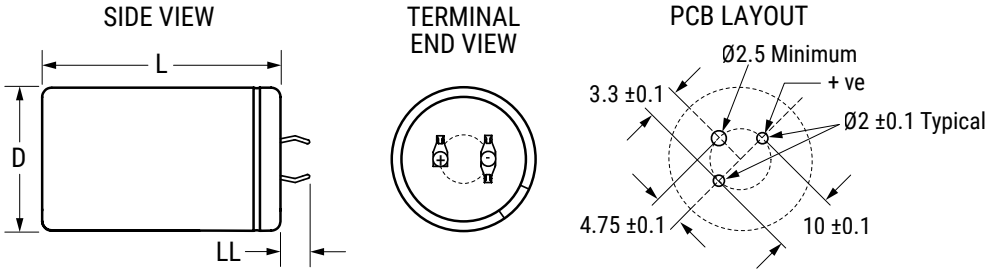

Style C/E

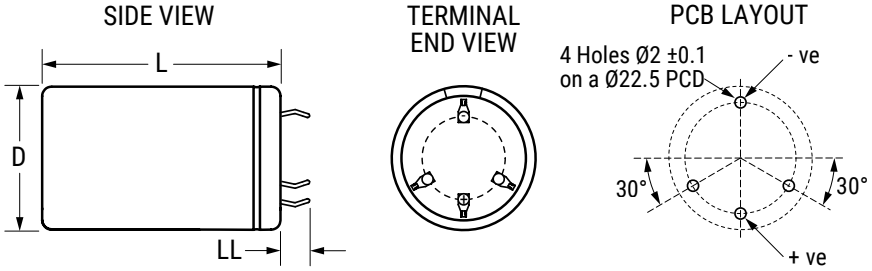

Style G/H

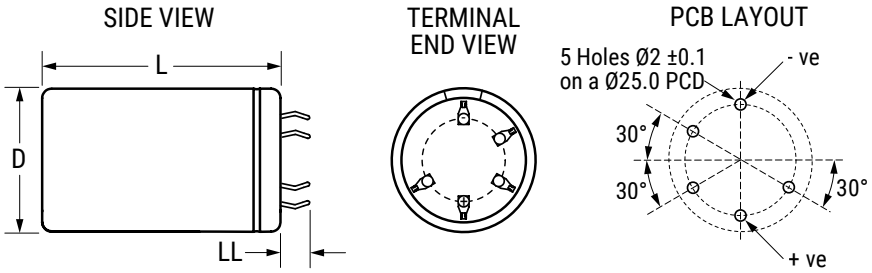

Shelf Life

The capacitance, ESR, and impedance of a capacitor will not change significantly after extended storage periods; however, the leakage current will very slowly increase. KEMET products are particularly stable and allow a shelf life in excess of three years at 40°C. See sectional specification under each product series for specific data.

Re-age (Reforming) Procedure

Apply the rated voltage to the capacitor at room temperature for a period of one hour or until the leakage current has fallen to a steady value below the specified limit. During re-aging, a maximum charging current of twice the specified leakage current or 5 mA (whichever is greater) is suggested.

Reliability

The reliability of a component can be defined as the probability that it will perform satisfactorily under a given set of conditions for a given length of time.

In practice, it is impossible to predict with absolute certainty how any individual component will perform. Therefore, we must utilize probability theory. It is also necessary to clearly define the level of stress involved (e.g., operating voltage, ripple current, temperature, and time.) Finally, the meaning of satisfactory performance must be defined by specifying a set of conditions, which determine the end of life of the component.

KEMET provides an online life calculator that can be used to predict hours of life for a given part number in specific application conditions. This can be found at: https://elc.kemet.com.

End of Life Definition

Catastrophic failure: short circuit, open circuit or safety vent operation

Parametric Failure:
- Change in capacitance > ±15%
- Leakage current > initial specified limit
- ESR > 3X ESR Limit

Table 1 – Ratings & Part Number Reference

VDC	Rated Capacitance	Size Code	Case Size	Ripple Current		ESR Maximum	Impedance Maximum	Part Number
	100 Hz 20°C (µF)		D x L (mm)	100 Hz 105°C (A)	10 kHz 105°C (A)	100 Hz 20°C (mΩ)	10 kHz 20°C (mΩ)	
25	10,000	BB	25 x 30	3.66	4.54	120	335	ALC80(1)103BB025
25	12,000	BC	25 x 35	4.19	5.22	99	87	ALC80(1)123BC025
25	15,000	BD	25 x 40	4.73	5.81	81	71	ALC80(1)153BD025
25	16,000	CB	30 x 30	5.61	7.27	71	62	ALC80(1)163CB025
25	18,000	CC	30 x 35	6.27	8.25	62	54	ALC80(1)183CC025
25	22000	CD	30 x 40	7.05	9.17	52	45	ALC80(1)223CD025
25	24,000	CD	30 x 40	7.23	9.26	48	42	ALC80(1)243CD025
25	33,000	CF	30 x 50	8.63	10.78	36	31	ALC80(1)333CF025
25	27,000	DC	35 x 35	7.28	8.75	47	41	ALC80(1)273DC025
25	33,000	DD	35 x 40	8.19	9.78	39	34	ALC80(1)333DD025
25	39,000	DE	35 x 45	9.00	10.67	33	29	ALC80(1)393DE025
25	47,000	DF	35 x 50	9.79	11.43	28	25	ALC80(1)473DF025
25	56000	DH	35 x 60	10.93	12.70	24	21	ALC80(1)563DH025
25	30,000	EB	40 x 30	6.75	7.64	49	44	ALC80(1)303EB025
25	62,000	EF	40 x 50	10.50	11.74	25	22	ALC80(1)623EF025
25	68,000	EF	40 x 50	10.50	11.59	24	22	ALC80(1)683EF025
25	82,000	EH	40 x 60	11.85	13.05	20	18	ALC80(1)823EH025
25	100000	EJ	40 x 70	12.92	14.10	17	16	ALC80(1)104EJ025
25	110,000	EL	40 x 80	13.66	14.88	16	15	ALC80(1)114EL025
25	120,000	EL	40 x 80	13.78	14.87	15	14	ALC80(1)124EL025
25	150000	EN	40 x 100	14.81	15.81	14	12	ALC80(1)154EN025
25	180,000	FP	45 x 105	18.82	20.45	10	9	ALC80(1)184FP025
25	220,000	KP	50 x 105	19.80	21.16	9	9	ALC80(1)224KP025
25	240,000	KP	50 x 105	20.06	21.29	9	8	ALC80(1)244KP025
40	3,900	BB	25 x 30	3.26	4.52	134	108	ALC80(1)392BB040
40	4700	BC	25 x 35	3.73	5.19	111	89	ALC80(1)472BC040
40	5600	BD	25 x 40	4.17	5.76	94	75	ALC80(1)562BD040
40	6,200	BD	25 x 40	4.29	5.78	87	70	ALC80(1)622BD040
40	6,200	CB	30 x 30	4.91	7.22	81	64	ALC80(1)622CB040
40	6,800	CB	30 x 30	5.05	7.25	75	60	ALC80(1)682CB040
40	8200	CC	30 x 35	5.77	8.30	62	49	ALC80(1)822CC040
40	10,000	CD	30 x 40	6.51	9.23	51	41	ALC80(1)103CD040
40	13,000	CF	30 x 50	7.67	10.68	40	32	ALC80(1)133CF040
40	12,000	DC	35 x 35	6.74	8.65	47	39	ALC80(1)123DC040
40	13,000	DD	35 x 40	7.44	9.76	43	35	ALC80(1)133DD040
40	15,000	DE	35 x 45	8.15	10.65	37	30	ALC80(1)153DE040
40	18000	DF	35 x 50	8.91	11.41	32	26	ALC80(1)183DF040
40	20,000	DF	35 x 50	9.10	11.36	30	25	ALC80(1)203DF040
40	22000	DG	35 x 55	9.69	12.06	27	23	ALC80(1)223DG040
40	12,000	EB	40 x 30	6.31	7.66	53	44	ALC80(1)123EB040
40	27,000	EF	40 x 50	9.90	11.60	26	22	ALC80(1)273EF040
40	33,000	EH	40 x 60	11.19	13.02	21	18	ALC80(1)333EH040
40	39,000	EJ	40 x 70	12.20	14.07	19	16	ALC80(1)393EJ040
40	47,000	EL	40 x 80	13.06	14.81	17	14	ALC80(1)473EL040
40	56,000	EN	40 x 100	13.94	15.62	15	13	ALC80(1)563EN040
40	68,000	FP	45 x 105	17.50	20.12	11	9	ALC80(1)683FP040
40	82,000	FP	45 x 105	18.33	20.56	10	9	ALC80(1)823FP040
40	100,000	KP	50 x 105	19.33	21.19	9	8	ALC80(1)104KP040
63	2,700	BB	25 x 30	2.91	4.16	139	104	ALC80(1)272BB063
63	3,300	BC	25 x 35	3.36	4.82	113	84	ALC80(1)332BC063
63	3,900	BD	25 x 40	3.76	5.39	96	72	ALC80(1)392BD063
63	4,300	CB	30 x 30	4.41	6.80	82	60	ALC80(1)432CB063
63	4700	CC	30 x 35	4.88	7.81	73	53	ALC80(1)472CC063
63	5600	CC	30 x 35	5.18	7.82	64	47	ALC80(1)562CC063
63	6,200	CD	30 x 40	5.67	8.72	57	42	ALC80(1)622CD063
63	9,100	CF	30 x 50	7.01	10.22	40	30	ALC80(1)912CF063
63	6,800	DC	35 x 35	5.80	8.08	56	42	ALC80(1)682DC063
63	7,500	DC	35 x 35	5.90	7.97	53	41	ALC80(1)752DC063
63	9,100	DD	35 x 40	6.68	8.96	44	34	ALC80(1)912DD063
VDC	Rated Capacitance	Size Code	Case Size	Ripple Current		ESR	Impedance	Part Number

(1) Termination code: See Termination Tables for available options.

Table 1 – Ratings & Part Number Reference cont.

VDC	Rated Capacitance	Size Code	Case Size	Ripple Current		ESR Maximum	Impedance Maximum	Part Number
	100 Hz 20°C (µF)		D x L (mm)	100 Hz 105°C (A)	10 kHz 105°C (A)	100 Hz 20°C (mΩ)	10 kHz 20°C (mΩ)	
63	10000	DE	35 x 45	7.29	9.90	40	30	ALC80(1)103DE063
63	12,000	DF	35 x 50	7.99	10.62	34	26	ALC80(1)123DF063
63	15,000	DH	35 x 60	9.09	11.88	28	21	ALC80(1)153DH063
63	7,500	EB	40 x 30	5.52	6.95	60	48	ALC80(1)752EB063
63	8200	EB	40 x 30	5.53	6.78	58	46	ALC80(1)822EB063
63	18,000	EF	40 x 50	8.82	10.54	28	23	ALC80(1)183EF063
63	22,000	EH	40 x 60	10.07	11.97	24	19	ALC80(1)223EH063
63	27,000	EJ	40 x 70	11.12	13.02	20	17	ALC80(1)273EJ063
63	30,000	EL	40 x 80	11.89	13.89	18	15	ALC80(1)303EL063
63	33000	EL	40 x 80	12.01	13.80	18	15	ALC80(1)333EL063
63	39,000	EN	40 x 100	13.06	14.90	16	13	ALC80(1)393EN063
63	47000	FP	45 x 105	16.50	19.48	11	9	ALC80(1)473FP063
63	51,000	FP	45 x 105	16.83	19.59	11	9	ALC80(1)513FP063
63	56000	KP	50 x 105	17.46	20.02	11	9	ALC80(1)563KP063
63	62,000	KP	50 x 105	17.79	20.09	10	9	ALC80(1)623KP063
63	68,000	KP	50 x 105	18.03	20.09	10	9	ALC80(1)683KP063
100	1,000	BB	25 x 30	2.36	3.40	289	237	ALC80(1)102BB100
100	1200	BC	25 x 35	2.71	3.94	239	194	ALC80(1)122BC100
100	1,500	BD	25 x 40	3.10	4.43	193	157	ALC80(1)152BD100
100	1,600	BD	25 x 40	3.16	4.45	184	151	ALC80(1)162BD100
100	1500	CB	30 x 30	3.45	5.36	185	149	ALC80(1)152CB100
100	1,600	CB	30 x 30	3.54	5.40	175	142	ALC80(1)162CB100
100	1,800	CC	30 x 35	3.93	6.15	153	123	ALC80(1)182CC100
100	2200	CD	30 x 40	4.47	6.91	126	102	ALC80(1)222CD100
100	2,400	CD	30 x 40	4.63	7.01	117	95	ALC80(1)242CD100
100	3,300	CF	30 x 50	5.64	8.35	86	70	ALC80(1)332CF100
100	2,700	DC	35 x 35	4.83	6.69	110	90	ALC80(1)272DC100
100	3,000	DC	35 x 35	4.94	6.65	102	84	ALC80(1)302DC100
100	3,600	DD	35 x 40	5.60	7.53	85	70	ALC80(1)362DD100
100	3900	DE	35 x 45	6.09	8.33	77	63	ALC80(1)392DE100
100	4,700	DF	35 x 50	6.73	9.03	65	54	ALC80(1)472DF100
100	5600	DG	35 x 55	7.35	9.66	56	46	ALC80(1)562DG100
100	3,000	EB	40 x 30	4.66	5.88	111	94	ALC80(1)302EB100
100	6,800	EF	40 x 50	7.56	9.25	52	44	ALC80(1)682EF100
100	8,200	EH	40 x 60	8.65	10.59	43	36	ALC80(1)822EH100
100	10,000	EJ	40 x 70	9.63	11.63	36	31	ALC80(1)103EJ100
100	12,000	EL	40 x 80	10.47	12.45	31	27	ALC80(1)123EL100
100	15,000	EN	40 x 100	11.60	13.59	26	22	ALC80(1)153EN100
100	18000	FP	45 x 105	14.51	17.67	20	17	ALC80(1)183FP100
100	20,000	FP	45 x 105	14.96	17.86	18	16	ALC80(1)203FP100
100	22,000	KP	50 x 105	15.60	18.32	18	15	ALC80(1)223KP100
100	24,000	KP	50 x 105	15.90	18.40	17	15	ALC80(1)243KP100
200	330	BB	25 x 30	1.31	2.85	645	388	ALC80(1)331BB200
200	390	BC	25 x 35	1.47	3.26	544	316	ALC80(1)391BC200
200	470	BD	25 x 40	1.67	3.67	452	263	ALC80(1)471BD200
200	510	BD	25 x 40	1.74	3.75	419	253	ALC80(1)511BD200
200	560	CB	30 x 30	1.94	4.41	376	225	ALC80(1)561CB200
200	680	CC	30 x 35	2.22	5.07	310	179	ALC80(1)681CC200
200	820	CD	30 x 40	2.52	5.72	257	154	ALC80(1)821CD200
200	1,100	CF	30 x 50	3.07	6.85	192	115	ALC80(1)112CF200
200	910	DC	35 x 35	2.77	5.77	237	144	ALC80(1)911DC200
200	1,200	DD	35 x 40	3.27	6.61	182	111	ALC80(1)122DD200
200	1500	DF	35 x 50	3.85	7.86	145	86	ALC80(1)152DF200
200	1,600	DF	35 x 50	3.97	7.94	137	84	ALC80(1)162DF200
200	1,800	DG	35 x 55	4.30	8.52	122	73	ALC80(1)182DG200
200	1,000	EB	40 x 30	2.90	5.39	228	142	ALC80(1)102EB200
200	2,200	EF	40 x 50	4.81	8.60	106	66	ALC80(1)222EF200
200	2,700	EH	40 x 60	5.53	9.82	86	54	ALC80(1)272EH200
200	3300	EJ	40 x 70	6.26	10.84	72	44	ALC80(1)332EJ200
VDC	Rated Capacitance	Size Code	Case Size	Ripple Current		ESR	Impedance	Part Number

(1) Termination code: See Termination Tables for available options.

Table 1 – Ratings & Part Number Reference cont.

VDC	Rated Capacitance	Size Code	Case Size	Ripple Current		ESR Maximum	Impedance Maximum	Part Number
	100 Hz 20°C (µF)		D x L (mm)	100 Hz 105°C (A)	10 kHz 105°C (A)	100 Hz 20°C (mΩ)	10 kHz 20°C (mΩ)	
200	3,900	EL	40 x 80	6.90	11.67	62	39	ALC80(1)392EL200
200	4700	EN	40 x 100	7.67	12.71	52	33	ALC80(1)472EN200
200	5,600	FP	45 x 105	9.00	16.01	42	26	ALC80(1)562FP200
200	6,800	FP	45 x 105	9.99	16.71	36	23	ALC80(1)682FP200
200	8,200	KP	50 x 105	11.15	17.54	31	20	ALC80(1)822KP200
250	220	BB	25 x 30	1.17	2.70	796	469	ALC80(1)221BB250
250	270	BC	25 x 35	1.34	3.12	648	363	ALC80(1)271BC250
250	330	BD	25 x 40	1.53	3.53	532	314	ALC80(1)331BD250
250	330	CB	30 x 30	1.62	3.98	524	306	ALC80(1)331CB250
250	390	CC	30 x 35	1.83	4.52	443	245	ALC80(1)391CC250
250	470	CC	30 x 35	2.02	4.82	370	206	ALC80(1)471CC250
250	560	CD	30 x 40	2.28	5.43	311	182	ALC80(1)561CD250
250	750	CF	30 x 50	2.78	6.52	233	137	ALC80(1)751CF250
250	620	DC	35 x 35	2.50	5.53	286	170	ALC80(1)621DC250
250	750	DD	35 x 40	2.84	6.26	237	141	ALC80(1)751DD250
250	820	DE	35 x 45	3.06	6.81	216	122	ALC80(1)821DE250
250	1,000	DF	35 x 50	3.46	7.52	178	106	ALC80(1)102DF250
250	1,200	DG	35 x 55	3.86	8.19	150	86	ALC80(1)122DG250
250	620	EB	40 x 30	2.54	5.21	296	178	ALC80(1)621EB250
250	680	EB	40 x 30	2.64	5.23	274	159	ALC80(1)681EB250
250	1,500	EF	40 x 50	4.41	8.39	126	77	ALC80(1)152EF250
250	1,800	EH	40 x 60	5.02	9.57	105	64	ALC80(1)182EH250
250	2200	EJ	40 x 70	5.70	10.60	87	51	ALC80(1)222EJ250
250	2,700	EL	40 x 80	6.42	11.50	72	45	ALC80(1)272EL250
250	3,300	EN	40 x 100	7.22	12.62	60	36	ALC80(1)332EN250
250	3,900	FP	45 x 105	8.42	15.83	49	29	ALC80(1)392FP250
250	4,300	FP	45 x 105	8.89	16.22	45	28	ALC80(1)432FP250
250	4700	KP	50 x 105	9.52	16.86	42	25	ALC80(1)472KP250
250	5,600	KP	50 x 105	10.40	17.38	37	23	ALC80(1)562KP250
350	120	BB	25 x 30	0.91	2.55	1132	529	ALC80(1)121BB350
350	130	BB	25 x 30	0.95	2.62	1048	549	ALC80(1)131BB350
350	150	BC	25 x 35	1.06	2.95	906	423	ALC80(1)151BC350
350	180	BD	25 x 40	1.20	3.32	756	354	ALC80(1)181BD350
350	200	BD	25 x 40	1.27	3.45	683	358	ALC80(1)201BD350
350	180	CB	30 x 30	1.26	3.69	749	347	ALC80(1)181CB350
350	200	CB	30 x 30	1.34	3.85	675	352	ALC80(1)201CB350
350	220	CC	30 x 35	1.45	4.23	613	284	ALC80(1)221CC350
350	270	CC	30 x 35	1.62	4.59	502	234	ALC80(1)271CC350
350	330	CD	30 x 40	1.85	5.21	411	215	ALC80(1)331CD350
350	430	CF	30 x 50	2.23	6.20	316	165	ALC80(1)431CF350
350	360	DC	35 x 35	2.04	5.36	381	201	ALC80(1)361DC350
350	430	DD	35 x 40	2.30	6.05	319	168	ALC80(1)431DD350
350	470	DD	35 x 40	2.41	6.18	294	140	ALC80(1)471DD350
350	560	DE	35 x 45	2.70	6.87	247	118	ALC80(1)561DE350
350	620	DF	35 x 50	2.91	7.42	223	118	ALC80(1)621DF350
350	680	DG	35 x 55	3.11	7.91	203	97	ALC80(1)681DG350
350	390	EB	40 x 30	2.16	5.17	364	195	ALC80(1)391EB350
350	820	EF	40 x 50	3.54	8.25	175	94	ALC80(1)821EF350
350	1,000	EH	40 x 60	4.06	9.38	143	70	ALC80(1)102EH350
350	1,100	EH	40 x 60	4.26	9.52	132	71	ALC80(1)112EH350
350	1,200	EJ	40 x 70	4.57	10.35	120	59	ALC80(1)122EJ350
350	1,500	EL	40 x 80	5.22	11.29	98	49	ALC80(1)152EL350
350	1,600	EL	40 x 80	5.40	11.41	92	51	ALC80(1)162EL350
350	1800	EN	40 x 100	5.81	12.27	82	41	ALC80(1)182EN350
350	2200	FP	45 x 105	6.81	15.31	66	32	ALC80(1)222FP350
350	2,400	FP	45 x 105	7.19	15.72	61	33	ALC80(1)242FP350
350	2,700	FP	45 x 105	7.71	16.23	55	28	ALC80(1)272FP350
350	3,300	KP	50 x 105	8.81	17.27	47	26	ALC80(1)332KP350
400	100	BB	25 x 30	0.87	2.54	1213	532	ALC80(1)101BB400
VDC	Rated Capacitance	Size Code	Case Size	Ripple Current		ESR	Impedance	Part Number

(1) Termination code: See Termination Tables for available options.

Table 1 – Ratings & Part Number Reference cont.

VDC	Rated Capacitance	Size Code	Case Size	Ripple Current		ESR Maximum	Impedance Maximum	Part Number
	100 Hz 20°C (µF)		D x L (mm)	100 Hz 105°C (A)	10 kHz 105°C (A)	100 Hz 20°C (mΩ)	10 kHz 20°C (mΩ)	
400	110	BB	25 x 30	0.91	2.62	1106	567	ALC80(1)111BB400
400	120	BC	25 x 35	0.98	2.89	1010	442	ALC80(1)121BC400
400	150	BD	25 x 40	1.14	3.30	809	355	ALC80(1)151BD400
400	160	BD	25 x 40	1.18	3.38	761	390	ALC80(1)161BD400
400	180	CB	30 x 30	1.32	3.93	672	343	ALC80(1)181CB400
400	220	CC	30 x 35	1.52	4.52	550	240	ALC80(1)221CC400
400	270	CD	30 x 40	1.74	5.14	448	229	ALC80(1)271CD400
400	360	CF	30 x 50	2.11	6.17	337	172	ALC80(1)361CF400
400	300	DC	35 x 35	1.93	5.34	408	210	ALC80(1)301DC400
400	390	DD	35 x 40	2.28	6.15	316	163	ALC80(1)391DD400
400	470	DE	35 x 45	2.58	6.85	263	118	ALC80(1)471DE400
400	510	DF	35 x 50	2.74	7.36	242	125	ALC80(1)511DF400
400	560	DG	35 x 55	2.93	7.85	220	99	ALC80(1)561DG400
400	330	EB	40 x 30	2.07	5.16	384	200	ALC80(1)331EB400
400	680	EF	40 x 50	3.36	8.22	187	98	ALC80(1)681EF400
400	820	EH	40 x 60	3.82	9.33	156	71	ALC80(1)821EH400
400	910	EH	40 x 60	4.04	9.48	142	75	ALC80(1)911EH400
400	1000	EJ	40 x 70	4.34	10.32	128	60	ALC80(1)102EJ400
400	1200	EL	40 x 80	4.85	11.17	108	51	ALC80(1)122EL400
400	1,300	EL	40 x 80	5.07	11.34	101	54	ALC80(1)132EL400
400	1,500	EN	40 x 100	5.53	12.23	88	42	ALC80(1)152EN400
400	1,800	FP	45 x 105	6.40	15.15	71	33	ALC80(1)182FP400
400	2,200	FP	45 x 105	7.24	16.09	60	32	ALC80(1)222FP400
400	2,700	KP	50 x 105	8.32	17.17	50	27	ALC80(1)272KP400
450	82	BB	25 x 30	0.82	2.42	1573	814	ALC80(1)820BB450
450	91	BB	25 x 30	0.87	2.51	1422	816	ALC80(1)910BB450
450	100	BC	25 x 35	0.94	2.78	1289	667	ALC80(1)101BC450
450	120	BD	25 x 40	1.06	3.13	1075	556	ALC80(1)121BD450
450	130	BD	25 x 40	1.11	3.23	995	571	ALC80(1)131BD450
450	120	CB	30 x 30	1.12	3.45	1068	550	ALC80(1)121CB450
450	130	CB	30 x 30	1.17	3.57	987	564	ALC80(1)131CB450
450	150	CC	30 x 35	1.30	4.00	855	440	ALC80(1)151CC450
450	180	CC	30 x 35	1.44	4.31	715	369	ALC80(1)181CC450
450	220	CD	30 x 40	1.64	4.90	585	335	ALC80(1)221CD450
450	300	CF	30 x 50	2.03	5.94	430	247	ALC80(1)301CF450
450	240	DC	35 x 35	1.81	5.09	541	311	ALC80(1)241DC450
450	300	DD	35 x 40	2.09	5.81	434	250	ALC80(1)301DD450
450	330	DE	35 x 45	2.25	6.32	394	205	ALC80(1)331DE450
450	390	DF	35 x 50	2.51	6.94	334	174	ALC80(1)391DF450
450	430	DF	35 x 50	2.65	7.14	304	176	ALC80(1)431DF450
450	470	DG	35 x 55	2.82	7.62	278	160	ALC80(1)471DG450
450	270	EB	40 x 30	1.96	4.99	496	288	ALC80(1)271EB450
450	560	EF	40 x 50	3.20	7.97	240	140	ALC80(1)561EF450
450	680	EH	40 x 60	3.66	9.07	198	105	ALC80(1)681EH450
450	750	EH	40 x 60	3.86	9.23	181	106	ALC80(1)751EH450
450	820	EJ	40 x 70	4.14	10.03	165	88	ALC80(1)821EJ450
450	1,000	EL	40 x 80	4.67	10.92	136	73	ALC80(1)102EL450
450	1,100	EL	40 x 80	4.92	11.12	125	74	ALC80(1)112EL450
450	1,200	EN	40 x 100	5.20	11.88	114	62	ALC80(1)122EN450
450	1,500	FP	45 x 105	6.25	14.04	109	70	ALC80(1)152FP450
450	1,800	KP	50 x 105	7.13	15.27	93	57	ALC80(1)182KP450
450	2,000	KP	50 x 105	7.58	15.77	84	55	ALC80(1)202KP450
500	68	BB	25 x 30	0.77	2.06	2492	1656	ALC80(1)680BB500
500	75	BB	25 x 30	0.82	2.15	2263	1564	ALC80(1)750BB500
500	82	BC	25 x 35	0.88	2.36	2065	1372	ALC80(1)820BC500
500	100	BD	25 x 40	1.00	2.67	1695	1126	ALC80(1)101BD500
500	110	BD	25 x 40	1.06	2.79	1543	1066	ALC80(1)111BD500
500	110	CB	30 x 30	1.11	3.04	1536	1059	ALC80(1)111CB500
500	120	CB	30 x 30	1.16	3.15	1409	936	ALC80(1)121CB500
VDC	Rated Capacitance	Size Code	Case Size	Ripple Current		ESR	Impedance	Part Number

(1) Termination code: See Termination Tables for available options.

Table 1 – Ratings & Part Number Reference cont.

VDC	Rated Capacitance	Size Code	Case Size	Ripple Current		ESR Maximum	Impedance Maximum	Part Number
	100 Hz 20°C (µF)		D x L (mm)	100 Hz 105°C (A)	10 kHz 105°C (A)	100 Hz 20°C (mΩ)	10 kHz 20°C (mΩ)	
500	150	CC	30 x 35	1.35	3.66	1128	749	ALC80(1)151CC500
500	180	CD	30 x 40	1.53	4.13	940	649	ALC80(1)181CD500
500	240	CF	30 x 50	1.87	4.99	706	487	ALC80(1)241CF500
500	200	DC	35 x 35	1.71	4.40	851	589	ALC80(1)201DC500
500	240	DD	35 x 40	1.93	4.97	709	491	ALC80(1)241DD500
500	270	DE	35 x 45	2.10	5.43	630	420	ALC80(1)271DE500
500	330	DF	35 x 50	2.39	6.07	517	358	ALC80(1)331DF500
500	390	DG	35 x 55	2.66	6.66	438	293	ALC80(1)391DG500
500	220	EB	40 x 30	1.84	4.40	791	549	ALC80(1)221EB500
500	470	EF	40 x 50	3.04	7.12	372	259	ALC80(1)471EF500
500	560	EH	40 x 60	3.44	8.08	312	209	ALC80(1)561EH500
500	620	EH	40 x 60	3.64	8.29	283	197	ALC80(1)621EH500
500	680	EJ	40 x 70	3.91	9.00	258	173	ALC80(1)681EJ500
500	820	EL	40 x 80	4.39	9.86	215	150	ALC80(1)821EL500
500	1,000	EN	40 x 100	4.95	10.85	177	120	ALC80(1)102EN500
500	1200	FP	45 x 105	5.64	12.44	167	119	ALC80(1)122FP500
500	1500	KP	50 x 105	6.62	13.91	136	98	ALC80(1)152KP500
500	1800	KP	50 x 105	7.38	14.81	115	83	ALC80(1)182KP500
VDC	Rated Capacitance	Size Code	Case Size	Ripple Current		ESR	Impedance	Part Number

(1) Termination code: See Termination Tables for available options.

Environmental Compliance

All Part Numbers in this datasheet are Reach and RoHS compliant and Halogen-Free.

As an environmentally conscious company, KEMET is working continuously with improvements concerning the environmental effects of both our capacitors and their production.

In Europe (RoHS Directive) and in some other geographical areas such as China, legislation has been put in place to prevent the use of some hazardous materials, such as lead (Pb), in electronic equipment. All products in this catalog are produced to help our customers' obligations to guarantee their products and fulfill these legislative requirements. The only material of concern in our products has been lead (Pb), which has been removed from all designs to fulfill the requirement of containing less than 0.1% of lead in any homogeneous material. KEMET will closely follow any changes in legislation worldwide and make any necessary changes in its products, whenever needed.

Some customer segments such as medical, military and automotive electronics may still require the use of lead in electrode coatings. To clarify the situation and distinguish products from each other, a special symbol is used on the packaging labels for RoHS compatible capacitors.

Due to customer requirements, there may appear additional markings such as lead-free (LF), or lead-free wires (LFW) on the label.

Mechanical Data

Polarity and Reversed Voltage

Aluminium Electrolytic capacitors manufactured for use in DC applications contain an anode foil and a cathode foil. As such, they are polarized devices and must be connected with the +ve to the anode foil and the -ve to the cathode foil. If this were to be reversed then the electrolytic process that took place in forming the oxide layer on the anode would be recreated in trying to form an oxide layer on the cathode. In forming the cathode foil in this way, heat would be generated and gas given off within the capacitor, usually leading to catastrophic failure.

The cathode foil already possesses a thin stabilized oxide layer. This thin oxide layer is equivalent to a forming voltage of approximately 2 V. As a result, the capacitor can withstand a voltage reversal of up to 2 V for short periods. Above this voltage, the formation process will commence. Aluminium Electrolytic capacitors can also be manufactured for use in intermittent AC applications by using two anode foils in place of one anode and one cathode.

Mounting Position

The capacitor can be mounted upright or inclined to a horizontal position. Special attention for the safety vent coverage, which this ensures that internal gas generated can escape when the pressure reaches a certain value due to overstress or catastrophic failure. All mounting positions must allow the safety vent to work properly.

Insulating Resistance

≥ 100 MΩ at 100 VDC across insulating sleeve.

Voltage Proof

≥ 3,500 VDC across insulating sleeve.
≥ 2,500 VAC across insulating sleeve.

Safety Vent

For diameters up to 40 mm, the safety vent for overpressure is featured on the base (opposing end to the terminals), and for diameters 45 mm or higher, the safety vent is featured in the side of the can. This is a weakened area in the bottom of the can that is designed to relieve build-up of internal pressure due to overstress or catastrophic failure.

Marking

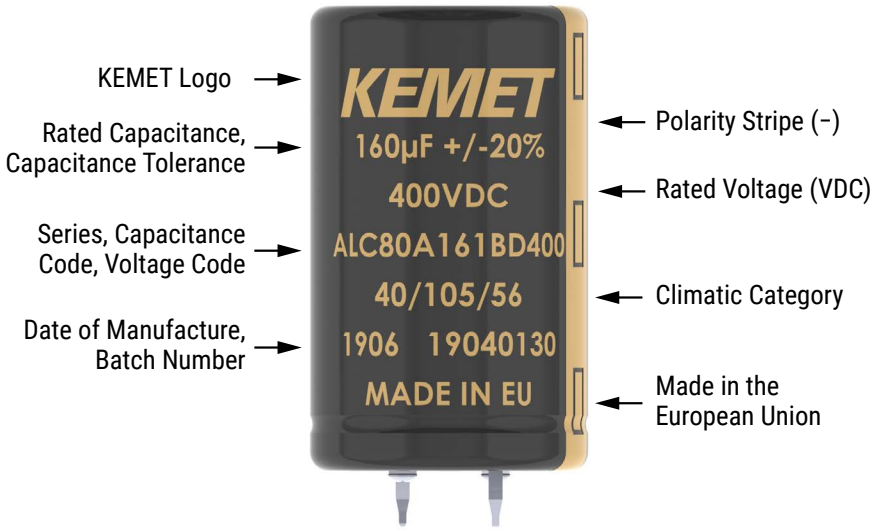

Construction

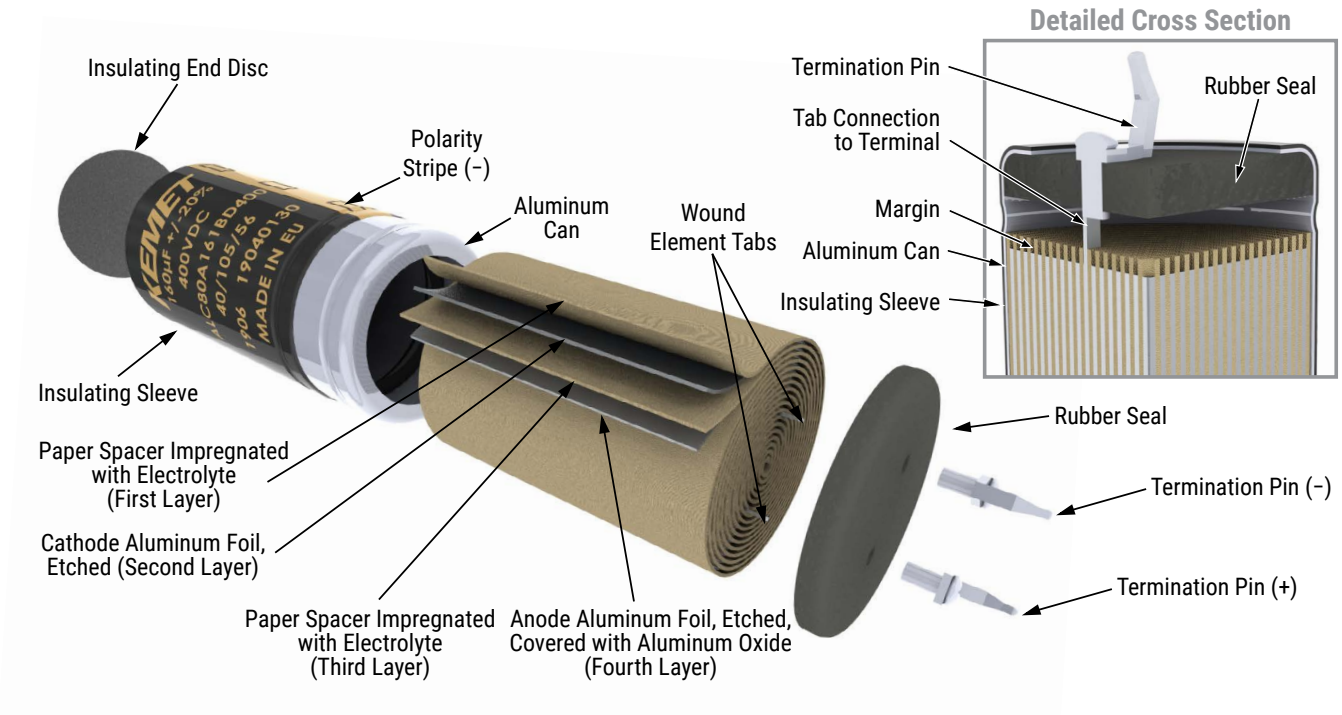

Construction Data

The manufacturing process begins with the anode foil being electrochemically etched to increase the surface area and then "formed" to produce the aluminum oxide layer. Both the anode and cathode foils are then interleaved with absorbent paper and wound into a cylinder. During the winding process, aluminum tabs are attached to each foil to provide the electrical contact.

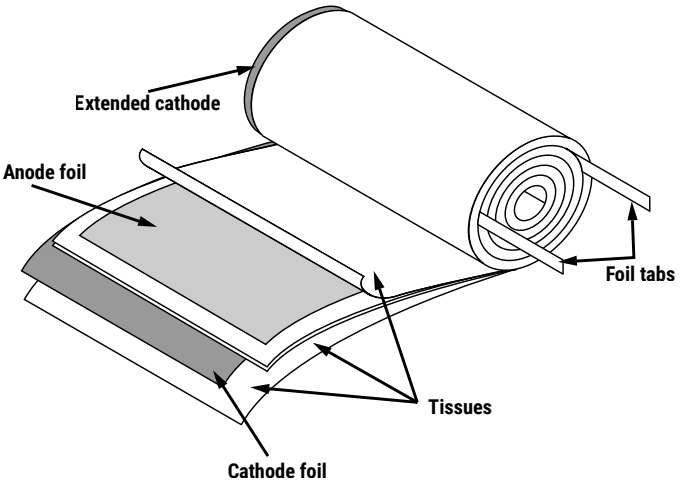

The deck, complete with terminals, is attached to the tabs and then folded down to rest on top of the winding. The complete winding is impregnated with electrolyte before being housed in a suitable container, usually an aluminum can, and sealed. Throughout the process, all materials inside the housing must be maintained at the highest purity and be compatible with the electrolyte.

Each capacitor is aged and tested before being sleeved and packed. The purpose of aging is to repair any damage in the oxide layer and thus reduce the leakage current to a very low level. Aging is normally carried out at the rated temperature of the capacitor and is accomplished by applying voltage to the device while carefully controlling the supply current. The process may take several hours to complete.

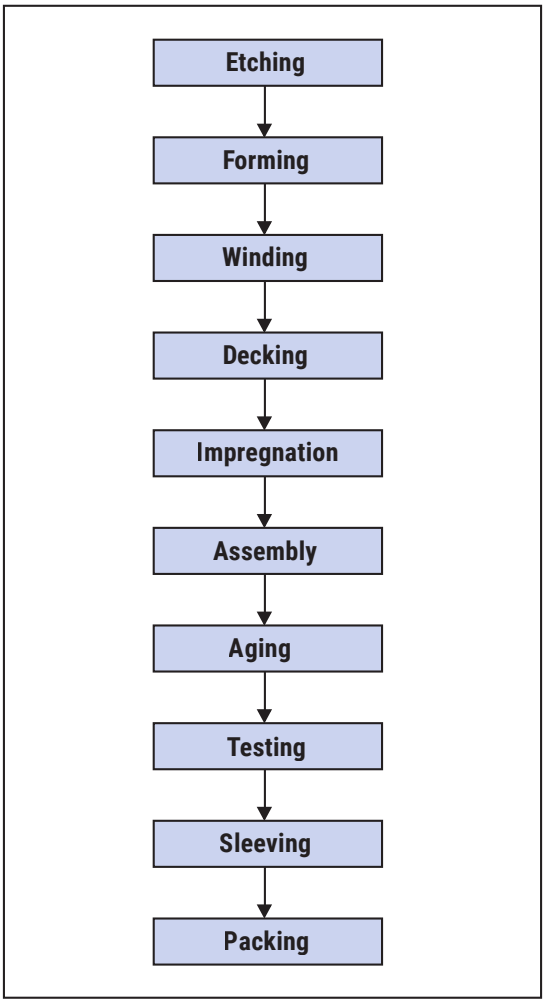

Damage to the oxide layer can occur due to variety of reasons:
- Slitting of the anode foil after forming
- Attaching the tabs to the anode foil
- Minor mechanical damage caused during winding

A sample from each batch is taken by the quality department after completion of the production process. This sample size is controlled by the use of recognized sampling tables defined in BS 6001.

The following tests are applied and may be varied at the request of the customer. In this case the batch, or special procedure, will determine the course of action.

Electrical:
- Leakage current
- Capacitance
- ESR
- Impedance
- Tan Delta

Mechanical/Visual:
- Overall dimensions
- Torque test of mounting stud
- Print detail
- Box labels
- Packaging, including packed quantity

KEMET Electronics Corporation Sales Offices

For a complete list of our global sales offices, please visit www.kemet.com/sales.

Disclaimer

YAGEO Corporation and its affiliates do not recommend the use of commercial or automotive grade products for high reliability applications or manned space flight.

All product specifications, statements, information and data (collectively, the "Information") in this datasheet are subject to change. The customer is responsible for checking and verifying the extent to which the Information contained in this publication is applicable to an order at the time the order is placed. All Information given herein is believed to be accurate and reliable, but it is presented without guarantee, warranty, or responsibility of any kind, expressed or implied.

Statements of suitability for certain applications are based on KEMET Electronics Corporation's ("KEMET") knowledge of typical operating conditions for such applications, but are not intended to constitute – and KEMET specifically disclaims – any warranty concerning suitability for a specific customer application or use. The Information is intended for use only by customers who have the requisite experience and capability to determine the correct products for their application. Any technical advice inferred from this Information or otherwise provided by KEMET with reference to the use of KEMET's products is given gratis, and KEMET assumes no obligation or liability for the advice given or results obtained.

Although KEMET designs and manufactures its products to the most stringent quality and safety standards, given the current state of the art, isolated component failures may still occur. Accordingly, customer applications which require a high degree of reliability or safety should employ suitable designs or other safeguards (such as installation of protective circuitry or redundancies) in order to ensure that the failure of an electrical component does not result in a risk of personal injury or property damage.

Although all product–related warnings, cautions and notes must be observed, the customer should not assume that all safety measures are indicated or that other measures may not be required.

KEMET requires its products to be packaged and shipped on pallets. This is because KEMET's products are specifically designed to be packed onto pallets during shipment. If for any reason, the products are removed from pallets by the shipping party and shipped to the end customer, then additional external protection is required. In this instance, an external box with two carton layers and an upwards orientation sticker must be used by the shipping party, with the empty space filled with filling material, and afterwards sealing the box. If this packing and packaging guideline is not followed by the shipping party, the shipping party, and not KEMET, will be held responsible for any packaging, packing and/or product damages upon delivery of the products to the end customer. KEMET hereby disclaims any liability for damages to the products or otherwise that have been, or threaten to be, inflicted, result from or are in any way related to the packaging, packing or damage by the shipping party in contravention of the packing and packaging guidelines herein.

KEMET is a registered trademark of KEMET Electronics Corporation.