ALC70, +85°C

Overview

The KEMET ALC70 High CV snap-in capacitors offer high performance and reliability in a wide range of case sizes and voltage ratings up to 630 V, featuring high ripple currents and long-life performance. Volumetric efficiency ensures the maximum capacitance capability in a smaller size.

Applications

Typical applications for the ALC70 capacitor include inverters, frequency converters, motor drives, motor control, UPS systems, smoothing, energy storage, alternative energy, charging stations, traction, demanding power supplies (SMPS), welding, and HVAC.

Benefits

- Maximum capacitance capability in a smaller size
- Long life, up to 18,000 hours at +85°C (V_R, I_R applied)
- High ripple current
- Excellent surge voltage capability
- PET sleeve and Lexan disc are recognized to UL: QMTR2, UL No. E358957 *(Other options available upon request)*
- Optimized designs available upon request

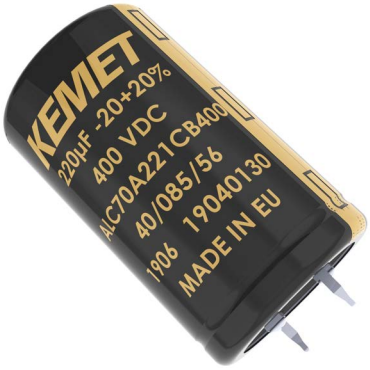

Part Number System

ALC70	A	562	BB	040	
Series	Termination	Capacitance Code (µF)	Size Code	Rated Voltage (VDC)	
Snap-in type Aluminum Electrolytic	See Termination Table	First two digits represent significant figures. Third digit specifies number of zeros.	See Dimension Table	040 = 40 063 = 63 100 = 100 200 = 200 250 = 250	350 = 350 400 = 400 450 = 450 500 = 500 550 = 550 600 = 600 630 = 630

© KEMET Electronics Corporation • One East Broward Boulevard
Fort Lauderdale, FL 33301 USA • 954-766-2800 • www.kemet.com

Performance Characteristics

Item	Performance Characteristics		
Capacitance Range	47 – 150,000 µF		
Rated Voltage	40 – 630 VDC		
Operating Temperature	−40 to +85°C		
Storage Temperature	−55 to +85°C		
Capacitance Tolerance	±20% at 100 Hz/+20°C		
Operational Lifetime	D (mm)	Rated Voltage and Ripple Current at +85°C (hours)	Rated Voltage at +85°C (hours)
	25	10,000	16,000
	30	13,000	21,000
	35	15,000	24,000
	40 – 50	18,000	29,000
End of Life Requirement	40 < V_R ≤ 160 VDC Δ C/C < ±20% V_R > 160 VDC Δ C/C < ±15% ESR < 3X ESR Limit, IL < initial specified limit		
Shelf Life	2,000 hours at +85°C or 30,000 hours at +40°C 0 VDC		
Leakage Current	I = 0.006 CV or 6,000 µA (whichever is smaller)		
	C = rated capacitance (µF), V = rated voltage (VDC). Voltage applied for 5 minutes at +20°C.		
Vibration Test Specifications		Procedure	Requirements
	D ≤ 40 mm	0.75 mm displacement amplitude or 10 G maximum acceleration. Vibration applied for three directions 2-hour sessions at 10 – 500 Hz. (Capacitor clamped by body)	No leakage of electrolyte or other visible damage. Deviations in capacitance from initial measurements must not exceed Δ C/C ±5%
	D > 40 mm	0.35 mm displacement amplitude or 5 G maximum acceleration. Vibration applied for three directions 0.5-hour sessions at 10 – 55 Hz. (Capacitor clamped by body)	
Standards	IEC 60384–4 long life grade 40/85/56		

Surge Voltage

Test Condition	Voltage (VDC)											
	40	63	100	200	250	350	400	450	500	550	600	630
≤ 30 second surge followed by a no load period of 330 seconds, 1,000 cycles at +85°C	46	72.5	115	230	288	385	440	495	550	605	660	690

Test Method & Performance

Endurance Life Test		
Conditions	Performance	
Temperature	+85°C	
Test Duration	2,000 hours	
Ripple Current	Rated ripple current in specified table	
Voltage	The sum of DC voltage and the peak AC voltage must not exceed the rated voltage of the capacitor	
Performance	**The following specifications will be satisfied when the capacitor is tested at +20°C:**	
Capacitance Change	≤ 160 V	Within 15% of the initial value
	> 160 V	Within 10% of the initial value
Equivalent Series Resistance	Does not exceed 150% of the initial limit	
Leakage Current	Does not exceed leakage current limit	

Dimensions – Millimeters

Size Code	Dimensions in mm D −0/+1	Dimensions in mm L ±2	Safety Vent Construction	Approximate Weight Grams
BB	25	30	Base Vent	28
BC	25	35		30
BD	25	40		35
CB	30	30		40
CC	30	35		45
CD	30	40		50
CE	30	45		55
CF	30	50		60
DB	35	30		50
DC	35	35		60
DD	35	40		65
DE	35	45		75
DF	35	50		80
DG	35	55		85
DH	35	60		90
DL	35	80		115
EB	40	30		55
EC	40	35		65
ED	40	40		85
EE	40	45		100
EF	40	50		105
EG	40	55		115
Note: Dimensions include sleeving				

Size Code	Dimensions in mm D −0/+1	Dimensions in mm L ±2	Safety Vent Construction	Approximate Weight Grams
EH	40	60	Base Vent	125
EJ	40	70		145
EL	40	80		165
EM	40	90		180
EN	40	100		195
FB	45	30	Side Vent	75
FC	45	35		85
FD	45	40		100
FE	45	45		115
FF	45	50		125
FG	45	55		135
FH	45	60		155
FL	45	80		185
FP	45	105		225
KB	50	30		95
KC	50	35		115
KD	50	40		130
KE	50	45		145
KF	50	50		160
KG	50	55		180
KH	50	60		200
KL	50	80		265
KP	50	105		310
Note: Dimensions include sleeving				

Termination Tables

Termination Code / Diameter (mm)	A	D	F	C	E	G	H
25	•	•	•				
30	•	•	•				
35	•	•	•	•	•		
40	•	•	•	•	•		
45				•	•	•	•
50				•	•	•	•
Mounting: These capacitors are designed to be mounted by their terminations alone and may be used in any position. Dummy pins must be isolated on 4 and 5 pin styles.							

Termination Code	Termination Style	LL ±1
Standard Termination Option		
A	2 Pin	6.3
G (D ≥ 45)	5 Pin	6.3
Other Termination Options		
D	2 Pin	4.0
F	3 Pin	4.0
C	4 Pin	6.3
E	4 Pin	4.0
H	5 Pin	4.0
Dimensions in mm		

Termination Tables cont.

Style A/D

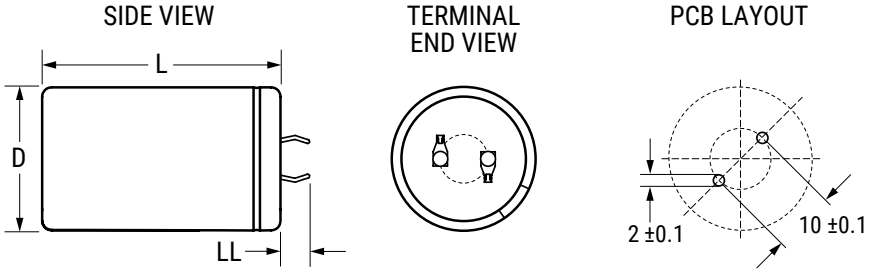

Style F

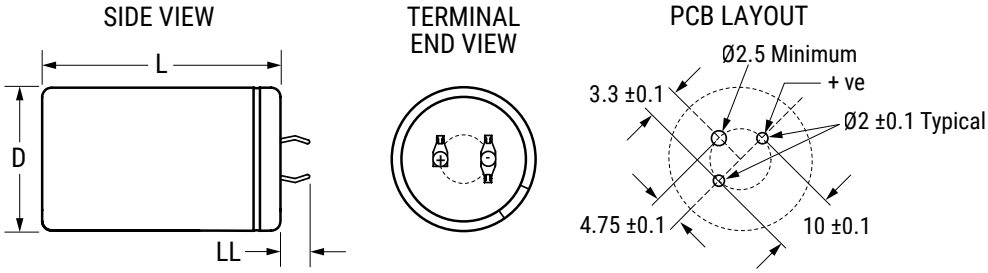

Style C/E

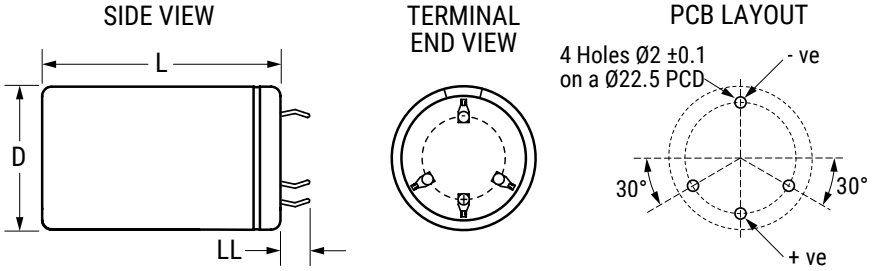

Style G/H

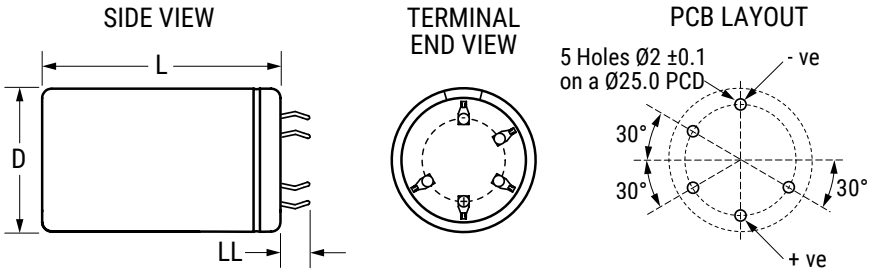

Shelf Life

The capacitance, ESR, and impedance of a capacitor will not change significantly after extended storage periods; however, the leakage current will very slowly increase. KEMET products are particularly stable and allow a shelf life in excess of three years at 40°C. See sectional specification under each product series for specific data.

Re-age (Reforming) Procedure

Apply the rated voltage to the capacitor at room temperature for a period of one hour or until the leakage current has fallen to a steady value below the specified limit. During re-aging, a maximum charging current of twice the specified leakage current or 5 mA (whichever is greater) is suggested.

Reliability

The reliability of a component can be defined as the probability that it will perform satisfactorily under a given set of conditions for a given length of time.

In practice, it is impossible to predict with absolute certainty how any individual component will perform. Therefore, we must utilize probability theory. It is also necessary to clearly define the level of stress involved (e.g., operating voltage, ripple current, temperature, and time.) Finally, the meaning of satisfactory performance must be defined by specifying a set of conditions, which determine the end of life of the component.

KEMET provides an online life calculator that can be used to predict hours of life for a given part number in specific application conditions. This can be found at: https://elc.kemet.com.

End of Life Definition

Catastrophic failure: short circuit, open circuit or safety vent operation

Parametric Failure:
- Change in capacitance > ±15%
- Leakage current > initial specified limit
- ESR > 3X ESR Limit

Table 1 – Ratings & Part Number Reference

Rated Voltage	Rated Capacitance	Size Code	Case Size	Ripple Current		ESR Maximum	Impedance Maximum	Part Number
(VDC)	100 Hz 20°C (µF)		D x L (mm)	100 Hz 85°C (A)	10 kHz 85°C (A)	100 Hz 20°C (mΩ)	10 kHz 20°C (mΩ)	
40	5,600	BB	25 x 30	3.17	4.09	131	108	ALC70(1)562BB040
40	6800	BC	25 x 35	3.63	4.70	108	88	ALC70(1)682BC040
40	8200	BD	25 x 40	4.08	5.24	90	74	ALC70(1)822BD040
40	8200	CB	30 x 30	4.61	6.28	84	68	ALC70(1)822CB040
40	9,100	BD	25 x 40	4.21	5.30	83	69	ALC70(1)912BD040
40	9,100	CB	30 x 30	4.79	6.41	77	63	ALC70(1)912CB040
40	10000	CC	30 x 35	5.27	7.16	69	56	ALC70(1)103CC040
40	12000	CC	30 x 35	5.63	7.43	59	49	ALC70(1)123CC040
40	15,000	CD	30 x 40	6.41	8.34	48	40	ALC70(1)153CD040
40	16,000	DC	35 x 35	6.49	8.05	49	41	ALC70(1)163DC040
40	18,000	EB	40 x 30	6.19	7.21	51	44	ALC70(1)183EB040
40	20,000	CF	30 x 50	7.64	9.79	37	31	ALC70(1)203CF040
40	20,000	DD	35 x 40	7.36	9.03	40	33	ALC70(1)203DD040
40	22000	DE	35 x 45	8.00	9.86	36	30	ALC70(1)223DE040
40	27,000	DF	35 x 50	8.80	10.66	30	25	ALC70(1)273DF040
40	33000	DH	35 x 60	9.90	11.88	25	21	ALC70(1)333DH040
40	36,000	EF	40 x 50	9.69	11.18	26	22	ALC70(1)363EF040
40	39000	EF	40 x 50	9.75	11.12	25	22	ALC70(1)393EF040
40	47,000	EH	40 x 60	11.02	12.52	21	18	ALC70(1)473EH040
40	56000	EJ	40 x 70	12.04	13.56	18	16	ALC70(1)563EJ040
40	68,000	EL	40 x 80	12.93	14.36	16	14	ALC70(1)683EL040
40	82000	EN	40 x 100	13.87	15.24	14	13	ALC70(1)823EN040
40	100000	FP	45 x 105	17.42	19.53	11	9	ALC70(1)104FP040
40	110,000	FP	45 x 105	17.87	19.84	10	9	ALC70(1)114FP040
40	120000	FP	45 x 105	18.24	20.07	10	9	ALC70(1)124FP040
40	150,000	KP	50 x 105	19.32	20.82	9	8	ALC70(1)154KP040
63	2700	BB	25 x 30	2.78	3.85	146	110	ALC70(1)272BB063
63	3,000	BB	25 x 30	2.86	3.85	136	104	ALC70(1)302BB063
63	3300	BC	25 x 35	3.20	4.44	119	90	ALC70(1)332BC063
63	3900	BC	25 x 35	3.35	4.46	106	81	ALC70(1)392BC063
63	4,700	BD	25 x 40	3.78	5.00	89	69	ALC70(1)472BD063
63	4,700	CB	30 x 30	4.30	6.15	81	61	ALC70(1)472CB063
63	5600	CC	30 x 35	4.89	7.06	68	50	ALC70(1)562CC063
63	6800	CD	30 x 40	5.53	7.89	56	42	ALC70(1)682CD063
63	7,500	CD	30 x 40	5.72	7.98	52	39	ALC70(1)752CD063
63	8,200	DC	35 x 35	5.79	7.50	53	41	ALC70(1)822DC063
63	9,100	EB	40 x 30	5.46	6.53	57	47	ALC70(1)912EB063
63	10,000	CF	30 x 50	6.85	9.40	40	30	ALC70(1)103CF063
63	10,000	DD	35 x 40	6.55	8.44	44	34	ALC70(1)103DD063
63	12000	DE	35 x 45	7.28	9.27	37	29	ALC70(1)123DE063
63	13,000	DF	35 x 50	7.82	10.03	34	26	ALC70(1)133DF063
63	15000	DG	35 x 55	8.43	10.69	30	23	ALC70(1)153DG063
63	18,000	EF	40 x 50	8.67	10.35	29	24	ALC70(1)183EF063
63	22000	EH	40 x 60	9.85	11.70	24	20	ALC70(1)223EH063
63	24,000	EH	40 x 60	9.94	11.62	23	19	ALC70(1)243EH063
63	27000	EJ	40 x 70	10.87	12.72	21	17	ALC70(1)273EJ063
63	33,000	EL	40 x 80	11.75	13.51	18	15	ALC70(1)333EL063
63	39000	EN	40 x 100	12.68	14.45	16	13	ALC70(1)393EN063
63	39,000	EM	40 x 90	12.46	14.11	16	14	ALC70(1)393EM063
63	47000	FP	45 x 105	15.83	18.61	12	10	ALC70(1)473FP063
63	56,000	FP	45 x 105	16.62	19.04	11	9	ALC70(1)563FP063
63	68000	KP	50 x 105	17.60	19.64	10	9	ALC70(1)683KP063
63	75,000	KP	50 x 105	17.87	19.71	10	9	ALC70(1)753KP063
100	1,200	BB	25 x 30	2.39	3.28	221	175	ALC70(1)122BB100
100	1500	BC	25 x 35	2.77	3.80	177	139	ALC70(1)152BC100
100	1,800	BD	25 x 40	3.13	4.28	148	117	ALC70(1)182BD100
100	2,000	CB	30 x 30	3.63	5.20	128	100	ALC70(1)202CB100
100	2200	CC	30 x 35	4.02	5.89	114	88	ALC70(1)222CC100
100	2700	CD	30 x 40	4.57	6.64	93	72	ALC70(1)272CD100
Rated Voltage	Rated Capacitance	Size Code	Case Size	Ripple Current		ESR	Impedance	Part Number

(1) Termination code: See Termination Tables for available options.

Table 1 – Ratings & Part Number Reference cont.

Rated Voltage	Rated Capacitance	Size Code	Case Size	Ripple Current		ESR Maximum	Impedance Maximum	Part Number
(VDC)	100 Hz 20°C (µF)		D x L (mm)	100 Hz 85°C (A)	10 kHz 85°C (A)	100 Hz 20°C (mΩ)	10 kHz 20°C (mΩ)	
100	3,000	CD	30 x 40	4.76	6.77	86	67	ALC70(1)302CD100
100	3,300	DC	35 x 35	4.89	6.47	84	67	ALC70(1)332DC100
100	3,600	EB	40 x 30	4.68	5.73	89	73	ALC70(1)362EB100
100	3,900	CF	30 x 50	5.67	8.01	66	52	ALC70(1)392CF100
100	4,300	DD	35 x 40	5.63	7.30	66	53	ALC70(1)432DD100
100	4700	DE	35 x 45	6.15	8.07	60	47	ALC70(1)472DE100
100	5,600	DF	35 x 50	6.77	8.76	51	41	ALC70(1)562DF100
100	6800	DG	35 x 55	7.42	9.40	43	35	ALC70(1)682DG100
100	8,200	EF	40 x 50	7.59	9.04	42	35	ALC70(1)822EF100
100	10,000	EH	40 x 60	8.70	10.35	34	29	ALC70(1)103EH100
100	12000	EJ	40 x 70	9.66	11.40	29	24	ALC70(1)123EJ100
100	15,000	EL	40 x 80	10.57	12.21	25	21	ALC70(1)153EL100
100	18000	EN	40 x 100	11.65	13.37	21	18	ALC70(1)183EN100
100	22000	FP	45 x 105	14.68	17.40	16	13	ALC70(1)223FP100
100	24,000	FP	45 x 105	15.03	17.57	15	13	ALC70(1)243FP100
100	27000	KP	50 x 105	15.74	18.07	14	12	ALC70(1)273KP100
100	30,000	KP	50 x 105	16.07	18.16	14	12	ALC70(1)303KP100
200	360	BB	25 x 30	1.33	2.61	613	382	ALC70(1)361BB200
200	390	BB	25 x 30	1.35	2.64	595	357	ALC70(1)391BB200
200	470	BC	25 x 35	1.54	3.04	492	295	ALC70(1)471BC200
200	560	BD	25 x 40	1.78	3.44	396	248	ALC70(1)561BD200
200	620	CB	30 x 30	2.00	4.02	352	218	ALC70(1)621CB200
200	680	CC	30 x 35	2.11	4.40	334	197	ALC70(1)681CC200
200	820	CD	30 x 40	2.39	4.96	277	164	ALC70(1)821CD200
200	910	CD	30 x 40	2.60	5.21	240	149	ALC70(1)911CD200
200	1000	DC	35 x 35	2.76	5.29	234	141	ALC70(1)102DC200
200	1,100	DC	35 x 35	2.96	5.42	206	130	ALC70(1)112DC200
200	1,100	EB	40 x 30	2.96	5.07	216	139	ALC70(1)112EB200
200	1200	EB	40 x 30	2.99	5.07	210	131	ALC70(1)122EB200
200	1,300	CF	30 x 50	3.27	6.41	170	106	ALC70(1)132CF200
200	1,300	DD	35 x 40	3.32	6.11	174	110	ALC70(1)132DD200
200	1500	DE	35 x 45	3.58	6.71	157	96	ALC70(1)152DE200
200	1,800	DF	35 x 50	4.11	7.42	127	81	ALC70(1)182DF200
200	2200	EF	40 x 50	4.62	8.04	113	70	ALC70(1)222EF200
200	2,400	EF	40 x 50	4.90	8.13	101	66	ALC70(1)242EF200
200	2700	EH	40 x 60	5.29	9.15	92	57	ALC70(1)272EH200
200	3,000	EH	40 x 60	5.67	9.30	81	53	ALC70(1)302EH200
200	3300	EH	40 x 60	5.76	9.37	78	50	ALC70(1)332EH200
200	3900	EJ	40 x 70	6.44	10.36	67	43	ALC70(1)392EJ200
200	4,300	EL	40 x 80	7.04	11.13	58	39	ALC70(1)432EL200
200	4700	EL	40 x 80	7.16	11.24	57	37	ALC70(1)472EL200
200	5600	EN	40 x 100	7.94	12.31	48	31	ALC70(1)562EN200
200	6800	FP	45 x 105	9.47	15.53	38	24	ALC70(1)682FP200
200	7,500	FP	45 x 105	10.20	15.97	34	22	ALC70(1)752FP200
200	8200	KP	50 x 105	10.63	16.54	33	21	ALC70(1)822KP200
200	9,100	KP	50 x 105	11.39	16.89	29	20	ALC70(1)912KP200
200	10000	KP	50 x 105	11.63	17.10	29	19	ALC70(1)103KP200
250	270	BB	25 x 30	1.22	2.59	678	393	ALC70(1)271BB250
250	330	BC	25 x 35	1.40	2.99	554	306	ALC70(1)331BC250
250	390	BD	25 x 40	1.57	3.34	469	259	ALC70(1)391BD250
250	430	BD	25 x 40	1.65	3.44	428	249	ALC70(1)431BD250
250	470	CB	30 x 30	1.84	4.01	386	223	ALC70(1)471CB250
250	560	CC	30 x 35	2.08	4.57	323	177	ALC70(1)561CC250
250	680	CD	30 x 40	2.37	5.17	267	154	ALC70(1)681CD250
250	820	DC	35 x 35	2.71	5.39	228	134	ALC70(1)821DC250
250	820	EB	40 x 30	2.73	5.05	239	143	ALC70(1)821EB250
250	910	CF	30 x 50	2.88	6.21	200	116	ALC70(1)911CF250
250	1,000	DD	35 x 40	3.09	6.12	188	111	ALC70(1)102DD250
250	1200	DE	35 x 45	3.48	6.81	157	89	ALC70(1)122DE250
Rated Voltage	Rated Capacitance	Size Code	Case Size	Ripple Current		ESR	Impedance	Part Number

(1) Termination code: See Termination Tables for available options

Table 1 – Ratings & Part Number Reference cont.

Rated Voltage	Rated Capacitance	Size Code	Case Size	Ripple Current		ESR Maximum	Impedance Maximum	Part Number
(VDC)	100 Hz 20°C (µF)		D x L (mm)	100 Hz 85°C (A)	10 kHz 85°C (A)	100 Hz 20°C (mΩ)	10 kHz 20°C (mΩ)	
250	1,300	DF	35 x 50	3.71	7.33	145	85	ALC70(1)132DF250
250	1500	DG	35 x 55	4.06	7.92	126	71	ALC70(1)152DG250
250	1,800	EF	40 x 50	4.53	8.11	111	67	ALC70(1)182EF250
250	2200	EH	40 x 60	5.20	9.26	91	53	ALC70(1)222EH250
250	2,400	EH	40 x 60	5.40	9.33	85	52	ALC70(1)242EH250
250	2700	EJ	40 x 70	5.90	10.26	75	44	ALC70(1)272EJ250
250	3,300	EL	40 x 80	6.61	11.13	63	39	ALC70(1)332EL250
250	3900	EN	40 x 100	7.29	12.13	53	32	ALC70(1)392EN250
250	4700	FP	45 x 105	8.59	15.19	43	25	ALC70(1)472FP250
250	5,600	FP	45 x 105	9.46	15.90	37	23	ALC70(1)562FP250
250	6,800	KP	50 x 105	10.63	16.84	32	20	ALC70(1)682KP250
350	150	BB	25 x 30	0.99	2.47	929	432	ALC70(1)151BB350
350	160	BB	25 x 30	1.02	2.52	873	454	ALC70(1)161BB350
350	180	BC	25 x 35	1.12	2.82	773	359	ALC70(1)181BC350
350	220	BC	25 x 35	1.25	3.02	639	300	ALC70(1)221BC350
350	240	BD	25 x 40	1.34	3.30	583	303	ALC70(1)241BD350
350	270	CB	30 x 30	1.51	3.84	514	266	ALC70(1)271CB350
350	330	CC	30 x 35	1.73	4.41	420	195	ALC70(1)331CC350
350	390	CD	30 x 40	1.94	4.94	356	184	ALC70(1)391CD350
350	470	DC	35 x 35	2.25	5.26	302	158	ALC70(1)471DC350
350	470	EB	40 x 30	2.29	5.00	312	166	ALC70(1)471EB350
350	560	CF	30 x 50	2.46	6.11	249	129	ALC70(1)561CF350
350	560	DD	35 x 40	2.53	5.93	253	133	ALC70(1)561DD350
350	680	DE	35 x 45	2.87	6.63	209	100	ALC70(1)681DE350
350	750	DF	35 x 50	3.09	7.15	190	100	ALC70(1)751DF350
350	820	DF	35 x 50	3.23	7.31	175	84	ALC70(1)821DF350
350	1000	EF	40 x 50	3.76	8.00	148	73	ALC70(1)102EF350
350	1,100	EF	40 x 50	3.93	8.09	136	74	ALC70(1)112EF350
350	1200	EH	40 x 60	4.27	9.07	123	61	ALC70(1)122EH350
350	1,300	EH	40 x 60	4.44	9.20	115	62	ALC70(1)132EH350
350	1500	EJ	40 x 70	4.90	10.09	100	50	ALC70(1)152EJ350
350	1800	EL	40 x 80	5.46	10.94	84	42	ALC70(1)182EL350
350	2,000	EL	40 x 80	5.77	11.15	77	43	ALC70(1)202EL350
350	2200	EN	40 x 100	6.13	11.94	70	36	ALC70(1)222EN350
350	2700	KP	45 x 105	7.22	14.88	55	28	ALC70(1)272FP350
350	3,300	FP	45 x 105	8.14	15.80	47	26	ALC70(1)332FP350
350	3,900	KP	50 x 105	9.11	16.74	41	23	ALC70(1)392KP350
400	150	BB	25 x 30	1.01	2.46	915	482	ALC70(1)151BB400
400	180	BC	25 x 35	1.15	2.82	761	359	ALC70(1)181BC400
400	220	BD	25 x 40	1.31	3.20	624	328	ALC70(1)221BD400
400	220	CB	30 x 30	1.38	3.55	616	321	ALC70(1)221CB400
400	270	CC	30 x 35	1.59	4.08	502	234	ALC70(1)271CC400
400	330	CD	30 x 40	1.81	4.64	411	214	ALC70(1)331CD400
400	360	CD	30 x 40	1.90	4.80	378	198	ALC70(1)361CD400
400	390	DC	35 x 35	2.08	4.96	354	187	ALC70(1)391DC400
400	430	EB	40 x 30	2.22	4.83	334	180	ALC70(1)431EB400
400	470	CF	30 x 50	2.29	5.73	290	152	ALC70(1)471CF400
400	510	DD	35 x 40	2.46	5.74	272	145	ALC70(1)511DD400
400	560	DE	35 x 45	2.65	6.25	247	118	ALC70(1)561DE400
400	680	DF	35 x 50	2.99	6.92	205	109	ALC70(1)681DF400
400	820	EF	40 x 50	3.47	7.62	175	93	ALC70(1)821EF400
400	910	EF	40 x 50	3.65	7.76	159	86	ALC70(1)911EF400
400	1,000	EH	40 x 60	3.97	8.66	143	76	ALC70(1)102EH400
400	1,200	EH	40 x 60	4.35	8.97	122	67	ALC70(1)122EH400
400	1500	EJ	40 x 70	5.01	10.01	99	50	ALC70(1)152EJ400
400	1,600	EL	40 x 80	5.27	10.65	92	51	ALC70(1)162EL400
400	1800	EL	40 x 80	5.60	10.89	84	43	ALC70(1)182EL400
400	2200	EN	40 x 100	6.32	12.01	69	36	ALC70(1)222EN400
400	2,700	FP	45 x 105	7.49	15.09	55	30	ALC70(1)272FP400
Rated Voltage	Rated Capacitance	Size Code	Case Size	Ripple Current		ESR	Impedance	Part Number

(1) Termination code: See Termination Tables for available options

Table 1 – Ratings & Part Number Reference cont.

Rated Voltage	Rated Capacitance	Size Code	Case Size	Ripple Current		ESR Maximum	Impedance Maximum	Part Number
(VDC)	100 Hz 20°C (µF)		D x L (mm)	100 Hz 85°C (A)	10 kHz 85°C (A)	100 Hz 20°C (mΩ)	10 kHz 20°C (mΩ)	
400	3300	KP	50 x 105	8.57	16.23	47	24	ALC70(1)332KP400
400	3,600	KP	50 x 105	8.98	16.52	43	25	ALC70(1)362KP400
450	120	BB	25 x 30	0.93	2.25	1165	654	ALC70(1)121BB450
450	150	CB	30 x 30	1.16	2.98	920	512	ALC70(1)151CB450
450	180	BD	25 x 40	1.22	2.94	778	437	ALC70(1)181BD450
450	180	CB	30 x 30	1.28	3.23	770	430	ALC70(1)181CB450
450	220	CD	30 x 40	1.50	3.84	628	349	ALC70(1)221CD450
450	270	CD	30 x 40	1.68	4.23	514	262	ALC70(1)271CD450
450	300	CD	30 x 40	1.79	4.43	464	259	ALC70(1)301CD450
450	330	DC	35 x 35	1.97	4.64	427	241	ALC70(1)331DC450
450	360	EB	40 x 30	2.10	4.56	405	231	ALC70(1)361EB450
450	390	CF	30 x 50	2.14	5.28	357	200	ALC70(1)391CF450
450	390	DD	35 x 40	2.21	5.22	361	203	ALC70(1)391DD450
450	470	DF	35 x 50	2.54	6.07	299	167	ALC70(1)471DF450
450	560	DF	35 x 50	2.80	6.45	253	143	ALC70(1)561DF450
450	680	DH	35 x 60	3.20	7.34	209	109	ALC70(1)681DH450
450	750	EF	40 x 50	3.42	7.33	195	112	ALC70(1)751EF450
450	820	EH	40 x 60	3.71	8.14	177	100	ALC70(1)821EH450
450	1,000	EH	40 x 60	4.11	8.53	148	85	ALC70(1)102EH450
450	1200	EL	40 x 80	4.69	9.87	123	66	ALC70(1)122EL450
450	1,300	EL	40 x 80	4.91	10.09	114	66	ALC70(1)132EL450
450	1500	EN	40 x 100	5.34	10.88	99	54	ALC70(1)152EN450
450	1800	EN	40 x 100	5.94	11.49	85	46	ALC70(1)182EN450
450	2,000	FP	45 x 105	6.97	14.41	68	39	ALC70(1)202FP450
450	2200	KP	50 x 105	7.52	15.23	63	33	ALC70(1)222KP450
450	2,700	KP	50 x 105	8.45	15.99	53	31	ALC70(1)272KP450
500	82	BB	25 x 30	0.77	1.67	2451	1692	ALC70(1)820BB500
500	91	BB	25 x 30	0.82	1.75	2213	1568	ALC70(1)910BB500
500	100	BC	25 x 35	0.89	1.92	2009	1387	ALC70(1)101BC500
500	120	BD	25 x 40	1.00	2.16	1675	1156	ALC70(1)121BD500
500	120	CB	30 x 30	1.05	2.32	1668	1149	ALC70(1)121CB500
500	130	BD	25 x 40	1.05	2.25	1548	1097	ALC70(1)131BD500
500	130	CB	30 x 30	1.10	2.41	1541	1090	ALC70(1)131CB500
500	150	CC	30 x 35	1.22	2.69	1335	920	ALC70(1)151CC500
500	180	CC	30 x 35	1.35	2.94	1115	769	ALC70(1)181CC500
500	220	CD	30 x 40	1.55	3.36	913	646	ALC70(1)221CD500
500	240	DC	35 x 35	1.71	3.61	841	597	ALC70(1)241DC500
500	270	EB	40 x 30	1.86	3.74	765	545	ALC70(1)271EB500
500	300	CF	30 x 50	1.91	4.11	670	475	ALC70(1)301CF500
500	300	DD	35 x 40	1.97	4.15	674	478	ALC70(1)301DD500
500	330	DE	35 x 45	2.12	4.49	612	423	ALC70(1)331DE500
500	390	DF	35 x 50	2.37	4.97	519	359	ALC70(1)391DF500
500	430	DF	35 x 50	2.50	5.19	472	335	ALC70(1)431DF500
500	470	DG	35 x 55	2.66	5.53	431	299	ALC70(1)471DG500
500	560	EF	40 x 50	3.02	6.04	370	264	ALC70(1)561EF500
500	680	EH	40 x 60	3.46	6.89	305	212	ALC70(1)681EH500
500	750	EH	40 x 60	3.65	7.13	278	199	ALC70(1)751EH500
500	820	EJ	40 x 70	3.91	7.70	254	177	ALC70(1)821EJ500
500	1,000	EL	40 x 80	4.42	8.53	209	150	ALC70(1)102EL500
500	1200	EN	40 x 100	4.93	9.38	175	123	ALC70(1)122EN500
500	1500	FP	45 x 105	5.85	10.93	153	112	ALC70(1)152FP500
500	1,600	FP	45 x 105	6.09	11.29	144	107	ALC70(1)162FP500
500	1800	KP	50 x 105	6.68	12.15	130	96	ALC70(1)182KP500
500	2,200	KP	50 x 105	7.53	13.20	108	81	ALC70(1)222KP500
550	68	BB	25 x 30	0.64	1.01	6330	5473	ALC70(1)680BB550
550	75	BB	25 x 30	0.67	1.06	5733	4984	ALC70(1)750BB550
550	82	BB	25 x 30	0.70	1.11	5257	4546	ALC70(1)820BB550
550	100	BC	25 x 35	0.81	1.28	4310	3727	ALC70(1)101BC550
550	120	BD	25 x 40	0.92	1.44	3586	3118	ALC70(1)121BD550
Rated Voltage	Rated Capacitance	Size Code	Case Size	Ripple Current		ESR	Impedance	Part Number

(1) Termination code: See Termination Tables for available options

Table 1 – Ratings & Part Number Reference cont.

Rated Voltage	Rated Capacitance	Size Code	Case Size	Ripple Current		ESR Maximum	Impedance Maximum	Part Number
(VDC)	100 Hz 20°C (µF)		D x L (mm)	100 Hz 85°C (A)	10 kHz 85°C (A)	100 Hz 20°C (mΩ)	10 kHz 20°C (mΩ)	
550	120	CB	30 x 30	0.96	1.52	3578	3110	ALC70(1)121CB550
550	150	CC	30 x 35	1.11	1.77	2868	2479	ALC70(1)151CC550
550	180	CD	30 x 40	1.26	2.00	2390	2066	ALC70(1)181CD550
550	200	CD	30 x 40	1.34	2.12	2149	1868	ALC70(1)201CD550
550	220	DC	35 x 35	1.49	2.33	1958	1703	ALC70(1)221DC550
550	240	EB	40 x 30	1.60	2.46	1825	1588	ALC70(1)241EB550
550	270	CF	30 x 50	1.65	2.59	1593	1384	ALC70(1)271CF550
550	270	DD	35 x 40	1.70	2.66	1596	1388	ALC70(1)271DD550
550	330	DE	35 x 45	1.94	3.03	1309	1133	ALC70(1)331DE550
550	360	DF	35 x 50	2.08	3.24	1198	1042	ALC70(1)361DF550
550	390	DF	35 x 50	2.16	3.38	1109	959	ALC70(1)391DF550
550	470	DH	35 x 60	2.46	3.85	920	800	ALC70(1)471DH550
550	470	EF	40 x 50	2.52	3.90	933	808	ALC70(1)471EF550
550	510	EF	40 x 50	2.64	4.05	860	749	ALC70(1)511EF550
550	560	EH	40 x 60	2.85	4.41	783	678	ALC70(1)561EH550
550	620	EH	40 x 60	3.03	4.64	708	616	ALC70(1)621EH550
550	680	EH	40 x 60	3.17	4.85	648	561	ALC70(1)681EH550
550	820	EJ	40 x 70	3.59	5.47	538	466	ALC70(1)821EJ550
550	910	EL	40 x 80	3.87	5.88	484	421	ALC70(1)911EL550
550	1000	EN	40 x 100	4.08	6.22	441	382	ALC70(1)102EN550
550	1200	EN	40 x 100	4.57	6.88	369	320	ALC70(1)122EN550
550	1,300	FP	45 x 105	5.12	7.94	316	273	ALC70(1)132FP550
550	1500	KP	50 x 105	5.72	8.79	278	239	ALC70(1)152KP550
550	1,800	KP	50 x 105	6.40	9.70	233	201	ALC70(1)182KP550
600	47	BB	25 x 30	0.69	1.54	2705	1739	ALC70(1)470BB600
600	51	BB	25 x 30	0.72	1.60	2496	1723	ALC70(1)510BB600
600	56	BC	25 x 35	0.78	1.74	2269	1458	ALC70(1)560BC600
600	68	BC	25 x 35	0.87	1.91	1874	1207	ALC70(1)680BC600
600	82	BD	25 x 40	0.99	2.17	1555	1074	ALC70(1)820BD600
600	82	CB	30 x 30	1.03	2.32	1548	1067	ALC70(1)820CB600
600	100	CC	30 x 35	1.19	2.66	1269	815	ALC70(1)101CC600
600	120	CD	30 x 40	1.34	3.00	1058	679	ALC70(1)121CD600
600	130	CD	30 x 40	1.40	3.13	977	674	ALC70(1)131CD600
600	150	DC	35 x 35	1.60	3.46	853	589	ALC70(1)151DC600
600	160	EB	40 x 30	1.69	3.53	817	566	ALC70(1)161EB600
600	180	CF	30 x 50	1.75	3.87	707	488	ALC70(1)181CF600
600	180	DD	35 x 40	1.81	3.91	711	491	ALC70(1)181DD600
600	220	DE	35 x 45	2.06	4.43	582	376	ALC70(1)221DE600
600	240	DF	35 x 50	2.20	4.74	534	369	ALC70(1)241DF600
600	270	DG	35 x 55	2.38	5.12	475	306	ALC70(1)271DG600
600	330	EF	40 x 50	2.75	5.69	397	275	ALC70(1)331EF600
600	390	EH	40 x 60	3.10	6.42	336	218	ALC70(1)391EH600
600	430	EH	40 x 60	3.27	6.67	306	212	ALC70(1)431EH600
600	470	EJ	40 x 70	3.50	7.19	279	182	ALC70(1)471EJ600
600	560	EL	40 x 80	3.91	7.91	235	153	ALC70(1)561EL600
600	620	EL	40 x 80	4.15	8.24	214	149	ALC70(1)621EL600
600	680	EN	40 x 100	4.38	8.75	195	127	ALC70(1)681EN600
600	820	EN	40 x 100	4.92	9.48	163	107	ALC70(1)821EN600
600	1,000	FP	45 x 105	5.75	11.48	132	92	ALC70(1)102FP600
600	1200	KP	50 x 105	6.57	12.70	113	74	ALC70(1)122KP600
600	1,300	KP	50 x 105	6.89	13.12	105	73	ALC70(1)132KP600
630	56	BB	25 x 30	0.75	1.65	2331	1604	ALC70(1)560BB630
630	68	BC	25 x 35	0.86	1.90	1919	1320	ALC70(1)680BC630
630	82	BD	25 x 40	0.98	2.16	1592	1095	ALC70(1)820BD630
630	82	CB	30 x 30	1.03	2.30	1584	1088	ALC70(1)820CB630
630	100	CC	30 x 35	1.18	2.65	1299	892	ALC70(1)101CC630
630	120	CD	30 x 40	1.34	3.00	1083	744	ALC70(1)121CD630
630	150	DC	35 x 35	1.58	3.43	873	601	ALC70(1)151DC630
630	150	EB	40 x 30	1.63	3.44	889	612	ALC70(1)151EB630
Rated Voltage	Rated Capacitance	Size Code	Case Size	Ripple Current		ESR	Impedance	Part Number

(1) Termination code: See Termination Tables for available options

Table 1 – Ratings & Part Number Reference cont.

Rated Voltage	Rated Capacitance	Size Code	Case Size	Ripple Current		ESR Maximum	Impedance Maximum	Part Number
(VDC)	100 Hz 20°C (µF)		D x L (mm)	100 Hz 85°C (A)	10 kHz 85°C (A)	100 Hz 20°C (mΩ)	10 kHz 20°C (mΩ)	
630	180	CF	30 x 50	1.73	3.83	724	497	ALC70(1)181CF630
630	180	DD	35 x 40	1.79	3.89	727	501	ALC70(1)181DD630
630	220	DE	35 x 45	2.04	4.40	596	410	ALC70(1)221DE630
630	220	DF	35 x 50	2.10	4.58	595	409	ALC70(1)221DF630
630	270	DG	35 x 55	2.38	5.12	486	334	ALC70(1)271DG630
630	330	DH	35 x 60	2.67	5.67	399	275	ALC70(1)331DH630
630	330	EF	40 x 50	2.74	5.68	406	280	ALC70(1)331EF630
630	390	EH	40 x 60	3.11	6.47	343	237	ALC70(1)391EH630
630	470	EJ	40 x 70	3.52	7.25	286	197	ALC70(1)471EJ630
630	560	EL	40 x 80	3.95	8.01	241	166	ALC70(1)561EL630
630	820	EN	40 x 100	4.88	9.46	167	115	ALC70(1)821EN630
630	1,000	FP	45 x 105	5.55	11.33	145	98	ALC70(1)102FP630
630	1,500	KP	50 x 105	7.06	13.39	100	68	ALC70(1)152KP630
Rated Voltage	Rated Capacitance	Size Code	Case Size	Ripple Current		ESR	Impedance	Part Number

(1) Termination code: See Termination Tables for available options

Environmental Compliance

All Part Numbers in this datasheet are Reach and RoHS compliant and Halogen-Free.

As an environmentally conscious company, KEMET is working continuously with improvements concerning the environmental effects of both our capacitors and their production.

In Europe (RoHS Directive) and in some other geographical areas such as China, legislation has been put in place to prevent the use of some hazardous materials, such as lead (Pb), in electronic equipment. All products in this catalog are produced to help our customers' obligations to guarantee their products and fulfill these legislative requirements. The only material of concern in our products has been lead (Pb), which has been removed from all designs to fulfill the requirement of containing less than 0.1% of lead in any homogeneous material. KEMET will closely follow any changes in legislation worldwide and make any necessary changes in its products, whenever needed.

Some customer segments such as medical, military and automotive electronics may still require the use of lead in electrode coatings. To clarify the situation and distinguish products from each other, a special symbol is used on the packaging labels for RoHS compatible capacitors.

Due to customer requirements, there may appear additional markings such as lead-free (LF), or lead-free wires (LFW) on the label.

Mechanical Data

Polarity and Reversed Voltage
Aluminium Electrolytic capacitors manufactured for use in DC applications contain an anode foil and a cathode foil. As such, they are polarized devices and must be connected with the +ve to the anode foil and the -ve to the cathode foil. If this were to be reversed then the electrolytic process that took place in forming the oxide layer on the anode would be recreated in trying to form an oxide layer on the cathode. In forming the cathode foil in this way, heat would be generated and gas given off within the capacitor, usually leading to catastrophic failure.

The cathode foil already possesses a thin stabilized oxide layer. This thin oxide layer is equivalent to a forming voltage of approximately 2 V. As a result, the capacitor can withstand a voltage reversal of up to 2 V for short periods. Above this voltage, the formation process will commence. Aluminium Electrolytic capacitors can also be manufactured for use in intermittent AC applications by using two anode foils in place of one anode and one cathode.

Mounting Position
The capacitor can be mounted upright or inclined to a horizontal position. Special attention for the safety vent coverage, which this ensures that internal gas generated can escape when the pressure reaches a certain value due to overstress or catastrophic failure. All mounting positions must allow the safety vent to work properly.

Insulating Resistance
≥ 100 MΩ at 100 VDC across insulating sleeve.

Voltage Proof
≥ 3,500 VDC across insulating sleeve.
≥ 2,500 VAC across insulating sleeve.

Safety Vent
For diameters up to 40 mm, the safety vent for overpressure is featured on the base (opposing end to the terminals), and for diameters 45 mm or higher, the safety vent is featured in the side of the can. This is a weakened area in the bottom of the can that is designed to relieve build-up of internal pressure due to overstress or catastrophic failure.

Marking

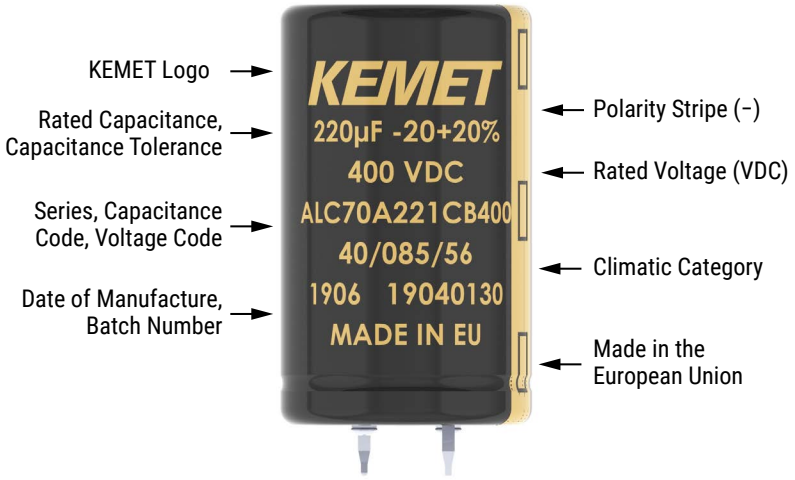

**Print shown is representative of the data included on the sleeve. Actual appearance can be continuous print style.*

Construction

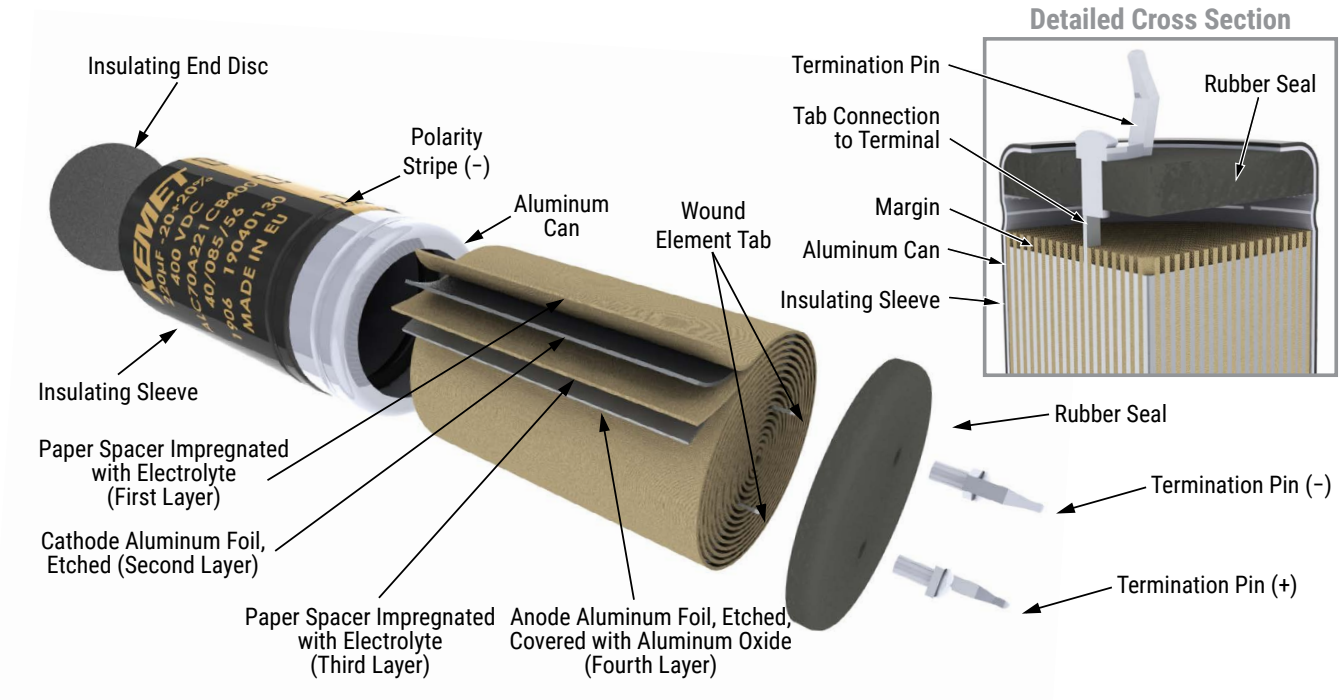

Construction Data

The manufacturing process begins with the anode foil being electrochemically etched to increase the surface area and then "formed" to produce the aluminum oxide layer. Both the anode and cathode foils are then interleaved with absorbent paper and wound into a cylinder. During the winding process, aluminum tabs are attached to each foil to provide the electrical contact.

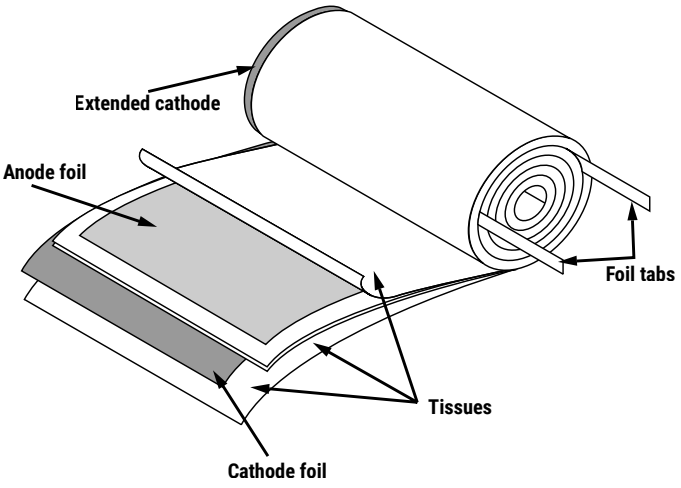

The deck, complete with terminals, is attached to the tabs and then folded down to rest on top of the winding. The complete winding is impregnated with electrolyte before being housed in a suitable container, usually an aluminum can, and sealed. Throughout the process, all materials inside the housing must be maintained at the highest purity and be compatible with the electrolyte.

Each capacitor is aged and tested before being sleeved and packed. The purpose of aging is to repair any damage in the oxide layer and thus reduce the leakage current to a very low level. Aging is normally carried out at the rated temperature of the capacitor and is accomplished by applying voltage to the device while carefully controlling the supply current. The process may take several hours to complete.

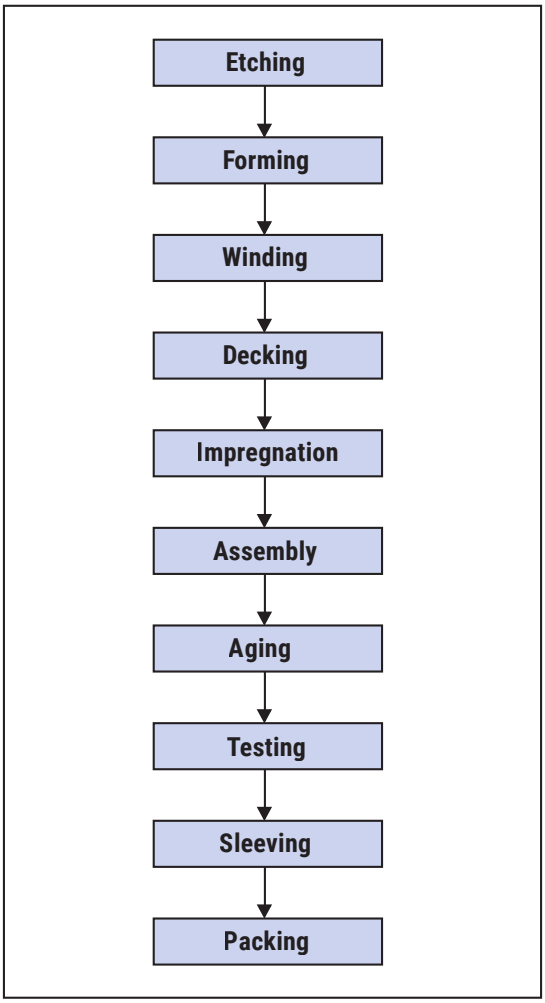

Damage to the oxide layer can occur due to variety of reasons:
- Slitting of the anode foil after forming
- Attaching the tabs to the anode foil
- Minor mechanical damage caused during winding

A sample from each batch is taken by the quality department after completion of the production process. This sample size is controlled by the use of recognized sampling tables defined in BS 6001.

The following tests are applied and may be varied at the request of the customer. In this case the batch, or special procedure, will determine the course of action.

Electrical:
- Leakage current
- Capacitance
- ESR
- Impedance
- Tan Delta

Mechanical/Visual:
- Overall dimensions
- Torque test of mounting stud
- Print detail
- Box labels
- Packaging, including packed quantity

KEMET Electronics Corporation Sales Offices

For a complete list of our global sales offices, please visit www.kemet.com/sales.

Disclaimer

YAGEO Corporation and its affiliates do not recommend the use of commercial or automotive grade products for high reliability applications or manned space flight.

All product specifications, statements, information and data (collectively, the "Information") in this datasheet are subject to change. The customer is responsible for checking and verifying the extent to which the Information contained in this publication is applicable to an order at the time the order is placed. All Information given herein is believed to be accurate and reliable, but it is presented without guarantee, warranty, or responsibility of any kind, expressed or implied.

Statements of suitability for certain applications are based on KEMET Electronics Corporation's ("KEMET") knowledge of typical operating conditions for such applications, but are not intended to constitute – and KEMET specifically disclaims – any warranty concerning suitability for a specific customer application or use. The Information is intended for use only by customers who have the requisite experience and capability to determine the correct products for their application. Any technical advice inferred from this Information or otherwise provided by KEMET with reference to the use of KEMET's products is given gratis, and KEMET assumes no obligation or liability for the advice given or results obtained.

Although KEMET designs and manufactures its products to the most stringent quality and safety standards, given the current state of the art, isolated component failures may still occur. Accordingly, customer applications which require a high degree of reliability or safety should employ suitable designs or other safeguards (such as installation of protective circuitry or redundancies) in order to ensure that the failure of an electrical component does not result in a risk of personal injury or property damage.

Although all product–related warnings, cautions and notes must be observed, the customer should not assume that all safety measures are indicated or that other measures may not be required.

KEMET requires its products to be packaged and shipped on pallets. This is because KEMET's products are specifically designed to be packed onto pallets during shipment. If for any reason, the products are removed from pallets by the shipping party and shipped to the end customer, then additional external protection is required. In this instance, an external box with two carton layers and an upwards orientation sticker must be used by the shipping party, with the empty space filled with filling material, and afterwards sealing the box. If this packing and packaging guideline is not followed by the shipping party, the shipping party, and not KEMET, will be held responsible for any packaging, packing and/or product damages upon delivery of the products to the end customer. KEMET hereby disclaims any liability for damages to the products or otherwise that have been, or threaten to be, inflicted, result from or are in any way related to the packaging, packing or damage by the shipping party in contravention of the packing and packaging guidelines herein.

KEMET is a registered trademark of KEMET Electronics Corporation.