ALA8D, +105°C

Overview

The KEMET ALA snap-in capacitors are designed for automotive applications. They can withstand vibration up to 20 G in accordance with the demanding requirements of the Automotive Electronics Council's AEC–Q200 qualification. The ALA8D capacitance values cover a range from 200 to 620 µF and a voltage range of 400 to 500 V.

Applications

Typical applications for the ALA8D capacitor is mainly in the field of e-mobility, such as on-board chargers, inverters, or wall boxes.

Benefits

- Designed for automotive usage
- Vibration proof 20 g
- AEC–Q200
- Long life, up to 9,000 hours at +105°C (V_R I_R applied)
- High ripple current
- High voltage
- Excellent surge voltage capability
- PET sleeve and Lexan disc are recognized to UL: QMTR2, UL No. E358957 *(Other options available upon request)*
- Optimized designs available upon request

Part Number System

ALA8D	A	361	CE	450
Series	Termination	Capacitance Code (µF)	Size Code	Rated Voltage (VDC)
Snap-In Aluminum Electrolytic	See Termination Table	First two digits represent significant figures. Third digit specifies number of zeros.	See Dimension Table	400 = 400 450 = 450 500 = 500

© KEMET Electronics Corporation • One East Broward Boulevard
Fort Lauderdale, FL 33301 USA • 954-766-2800 • www.kemet.com

Performance Characteristics

Item	Performance Characteristics		
Capacitance Range	200 – 620 µF		
Rated Voltage	400 – 500 VDC		
Operating Temperature	−40 to +105°C		
Storage Temperature	−55 to +105°C		
Capacitance Tolerance	±20% at 100 Hz/+20°C		
Operational Lifetime	D (mm)	Rated Voltage and Ripple Current at +105°C (hours)	Rated Voltage at +105°C (hours)
	25	6,000	10,000
	30	7,000	11,000
	35	8,000	13,000
	40	9,000	14,000
End of Life Requirement	V_R > 100 VDC Δ C/C < ±15%, ESR < 3 x ESR Limit, IL < initial specified limit		
Shelf Life	2,000 hours at +85°C or 30,000 hours at +40°C 0 VDC		
Leakage Current	I = 0.003 CV or 6,000 µA (whichever is smaller)		
	C = rated capacitance (µF), V = rated voltage (VDC). Voltage applied for 5 minutes at +20°C.		
Vibration Test Specifications		Procedure	Requirements
	D ≤ 40 mm	1.5 mm displacement amplitude or 20 G maximum acceleration. Vibration applied for three directions of 4-hour sessions at 10 – 2,000 Hz. (Capacitor clamped by body.)	No leakage of electrolyte or other visible damage. Deviations in capacitance from initial measurements must not exceed Δ C/C < 5%
Standards	AEC–Q200: aluminum electrolytic capacitors IEC 60384–4 long life grade 40/85/56		

Surge Voltage

Test Condition	Voltage (VDC)		
	400	450	500
≤ 30 second surge followed by a no load period of 330 seconds, 1,000 cycles at +105°C	440	495	550

Test Method & Performance

Endurance Life Test		
Conditions	Performance	
Temperature	+105°C	
Test Duration	2,000 hours	
Ripple Current	Rated ripple current in specified table	
Voltage	The sum of DC voltage and the peak AC voltage must not exceed the rated voltage of the capacitor	
Performance	**The following specifications will be satisfied when the capacitor is tested at +20°C:**	
Capacitance Change	≥ 400 V	Within 10% of the initial value
Equivalent Series Resistance	Does not exceed 150% of the initial limit	
Leakage Current	Does not exceed leakage current limit	

Dimensions – Millimeters

Size Code	Dimensions in mm		Approximate Weight Grams
	D	L	
	−0/+1	±2	
BB	25	30	28
BC	25	35	30
BD	25	40	35
CB	30	30	40
CC	30	35	45
CD	30	40	50
CE	30	45	55
CF	30	50	60
DB	35	30	50
DC	35	35	60
DD	35	40	65
DE	35	45	75
DF	35	50	80
EE	40	45	95
EF	40	50	105
Note: Dimensions include sleeving			

Termination Tables

Termination Code / Diameter (mm)	A	D	F	C	E
25	•	•	•		
30	•	•	•		
35	•	•	•	•	•
40	•	•	•	•	•
Mounting: These capacitors are designed to be mounted by their terminations alone and may be used in any position. Dummy pins must be isolated on 4 pin styles.					

Termination Code	Termination Style	LL ±1
Standard Termination Option		
A	2 Pin	6.3
Other Termination Options		
D	2 Pin	4.0
F	3 Pin	4.0
C	4 Pin	6.3
E	4 Pin	4.0
Dimensions in mm		

Termination Tables cont.

Style A/D

SIDE VIEW

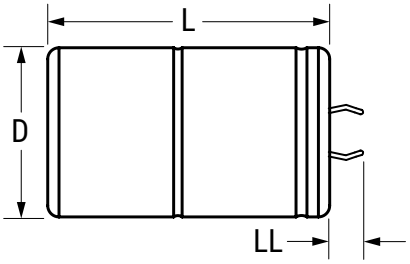

TERMINAL END VIEW

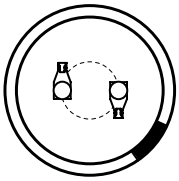

PCB LAYOUT

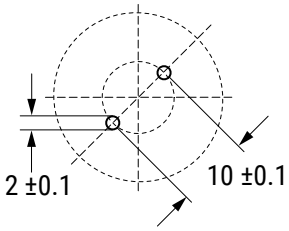

Style F

SIDE VIEW

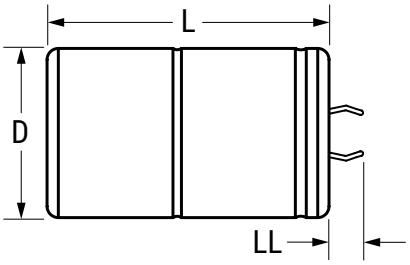

TERMINAL END VIEW

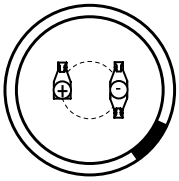

PCB LAYOUT

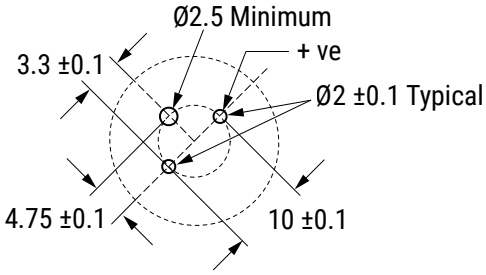

Style C/E

SIDE VIEW

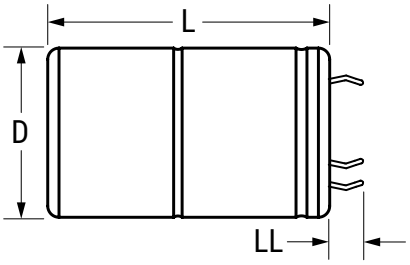

TERMINAL END VIEW

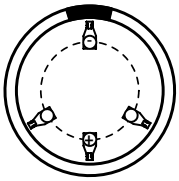

PCB LAYOUT

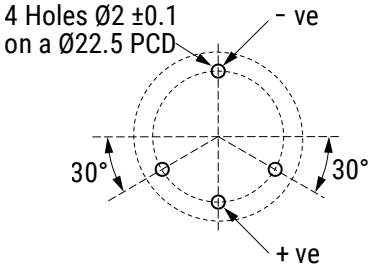

Black stripe denotes polarity stripe

Shelf Life

The capacitance, ESR, and impedance of a capacitor will not change significantly after extended storage periods; however, the leakage current will very slowly increase. KEMET products are particularly stable and allow a shelf life in excess of three years at 40°C. See sectional specification under each product series for specific data.

Re-age (Reforming) Procedure

Apply the rated voltage to the capacitor at room temperature for a period of one hour or until the leakage current has fallen to a steady value below the specified limit. During re-aging, a maximum charging current of twice the specified leakage current or 5 mA (whichever is greater) is suggested.

Reliability

The reliability of a component can be defined as the probability that it will perform satisfactorily under a given set of conditions for a given length of time.

In practice, it is impossible to predict with absolute certainty how any individual component will perform. Therefore, we must utilize probability theory. It is also necessary to clearly define the level of stress involved (e.g., operating voltage, ripple current, temperature, and time.) Finally, the meaning of satisfactory performance must be defined by specifying a set of conditions, which determine the end of life of the component.

KEMET provides an online life calculator that can be used to predict hours of life for a given part number in specific application conditions. This can be found at: https://elc.kemet.com.

End of Life Definition

Catastrophic failure: short circuit, open circuit or safety vent operation

Parametric Failure:
- Change in capacitance > ±15%
- Leakage current > initial specified limit
- ESR > 3 x ESR Limit

Environmental Compliance

All Part Numbers in this datasheet are Reach and RoHS compliant and Halogen-Free.

As an environmentally conscious company, KEMET is working continuously with improvements concerning the environmental effects of both our capacitors and their production.

In Europe (RoHS Directive) and in some other geographical areas such as China, legislation has been put in place to prevent the use of some hazardous materials, such as lead (Pb), in electronic equipment. All products in this catalog are produced to help our customers' obligations to guarantee their products and fulfill these legislative requirements. The only material of concern in our products has been lead (Pb), which has been removed from all designs to fulfill the requirement of containing less than 0.1% of lead in any homogeneous material. KEMET will closely follow any changes in legislation worldwide and make any necessary changes in its products, whenever needed.

Some customer segments such as medical, military and automotive electronics may still require the use of lead in electrode coatings. To clarify the situation and distinguish products from each other, a special symbol is used on the packaging labels for RoHS compatible capacitors.

Due to customer requirements, there may appear additional markings such as lead-free (LF), or lead-free wires (LFW) on the label.

Table 1 – Ratings & Part Number Reference

VDC	Rated Capacitance	Size Code	Case Size	Ripple Current		ESR Maximum	Impedance Maximum	Part Number	SPQ
	100 Hz 20°C (µF)		D x L (mm)	100 Hz 105°C (A)	10 kHz 105°C (A)	100 Hz 20°C (mΩ)	10 kHz 20°C (mΩ)		
400	270	CC	30 x 35	1.7	4.6	558	327	ALA8D(1)271CC400	160
400	360	CD	30 x 40	2.0	5.4	420	247	ALA8D(1)361CD400	160
400	390	DC	35 x 35	2.2	5.4	394	233	ALA8D(1)391DC400	100
400	430	CE	30 x 45	2.3	6.0	353	207	ALA8D(1)431CE400	160
400	470	CF	30 x 50	2.4	6.5	322	189	ALA8D(1)471CF400	160
400	470	DD	35 x 40	2.5	6.1	327	194	ALA8D(1)471DD400	100
400	560	DE	35 x 45	2.8	6.8	275	163	ALA8D(1)561DE400	100
400	620	DF	35 x 50	2.9	7.1	248	147	ALA8D(1)621DF400	100
400	680	EE	40 x 45	3.2	7.1	259	164	ALA8D(1)681EE400	72
400	820	EF	40 x 50	3.6	7.8	216	137	ALA8D(1)821EF400	36
450	240	CC	30 x 35	1.6	4.6	566	331	ALA8D(1)241CC450	160
450	300	CD	30 x 40	1.9	5.3	454	265	ALA8D(1)301CD450	160
450	360	CE	30 x 45	2.2	5.9	379	222	ALA8D(1)361CE450	160
450	360	DC	35 x 35	2.2	5.4	386	228	ALA8D(1)361DC450	100
450	430	CF	30 x 50	2.4	6.5	318	186	ALA8D(1)431CF450	160
450	430	DD	35 x 40	2.4	5.9	323	191	ALA8D(1)431DD450	100
450	510	DE	35 x 45	2.7	6.6	273	161	ALA8D(1)511DE450	100
450	560	DF	35 x 50	3.0	7.4	248	146	ALA8D(1)561DF450	100
450	560	EE	40 x 45	3.1	7.1	268	165	ALA8D(1)561EE450	72
450	680	EF	40 x 50	3.5	7.8	223	137	ALA8D(1)681EF450	36
500	200	CC	30 x 35	1.5	3.7	1031	760	ALA8D(1)201CC500	160
500	240	CD	30 x 40	1.8	4.2	859	633	ALA8D(1)241CD500	160
500	240	DC	35 x 35	1.8	4.3	863	637	ALA8D(1)241DC500	100
500	270	CE	30 x 45	1.9	4.6	764	563	ALA8D(1)271CE500	160
500	300	CF	30 x 50	2.0	4.8	687	506	ALA8D(1)301CF500	160
500	300	DD	35 x 40	2.0	4.7	692	510	ALA8D(1)301DD500	100
500	360	DE	35 x 45	2.4	5.5	577	426	ALA8D(1)361DE500	100
500	430	DF	35 x 50	2.7	6.1	484	358	ALA8D(1)431DF500	100
500	470	EE	40 x 45	2.9	6.3	428	312	ALA8D(1)471EE500	72
500	560	EF	40 x 50	3.3	7.0	360	263	ALA8D(1)561EF500	36
VDC	**Rated Capacitance**	**Size Code**	**Case Size**	**Ripple Current**		**ESR**	**Impedance**	**Part Number**	**SPQ**

(1) Termination code: See Termination Tables for available options.

Mechanical Data

Polarity & Reversed Voltage

Aluminium electrolytic capacitors manufactured for use in DC applications contain an anode foil and a cathode foil. As such, they are polarized devices and must be connected with the +ve to the anode foil and the -ve to the cathode foil. If this were to be reversed, then the electrolytic process that took place in forming the oxide layer on the anode would be recreated in trying to form an oxide layer on the cathode. In forming the cathode foil in this way, heat would be generated and gas given off within the capacitor, usually leading to catastrophic failure.

The cathode foil already possesses a thin stabilized oxide layer. This thin oxide layer is equivalent to a forming voltage of approximately 2 V. As a result, the capacitor can withstand a voltage reversal of up to 2 V for short periods. Above this voltage, the formation process will commence. Aluminium electrolytic capacitors can also be manufactured for use in intermittent AC applications by using two anode foils in place of one anode and one cathode.

Mounting Position

The capacitor can be mounted upright or inclined to a horizontal position. Special attention should be taken for the safety vent, which ensures that internal gas generated can escape when the pressure reaches a certain value due to overstress or catastrophic failure. All mounting positions must allow the safety vent to work properly.

Insulating Resistance

≥ 100 MΩ at 100 VDC across insulating sleeve.

Voltage Proof

≥ 3,500 VDC across insulating sleeve.
≥ 2,500 VAC across insulating sleeve.

Safety Vent

A safety vent for overpressure is featured on the base (opposing end to the terminals). This is a weakened area on the bottom of the can that is designed to relieve build-up of internal pressure due to overstress or catastrophic failure.

Marking

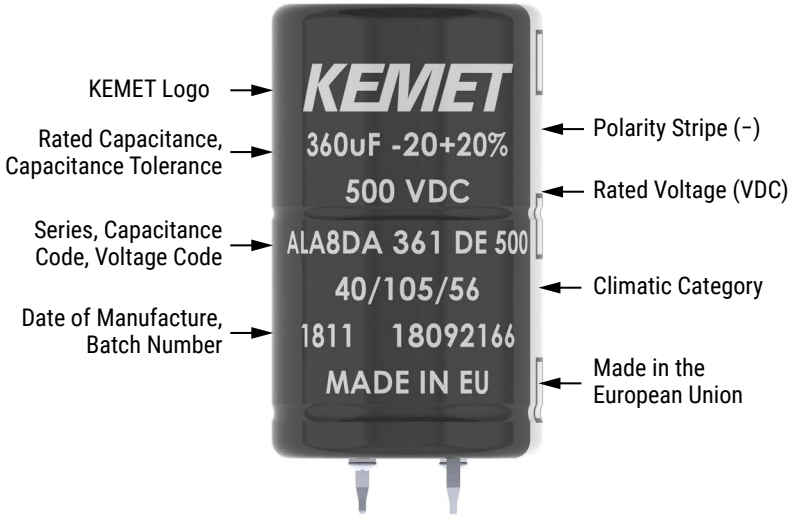

**Print shown is representative of the data included on the sleeve. Actual appearance can be continuous print style.*

Construction

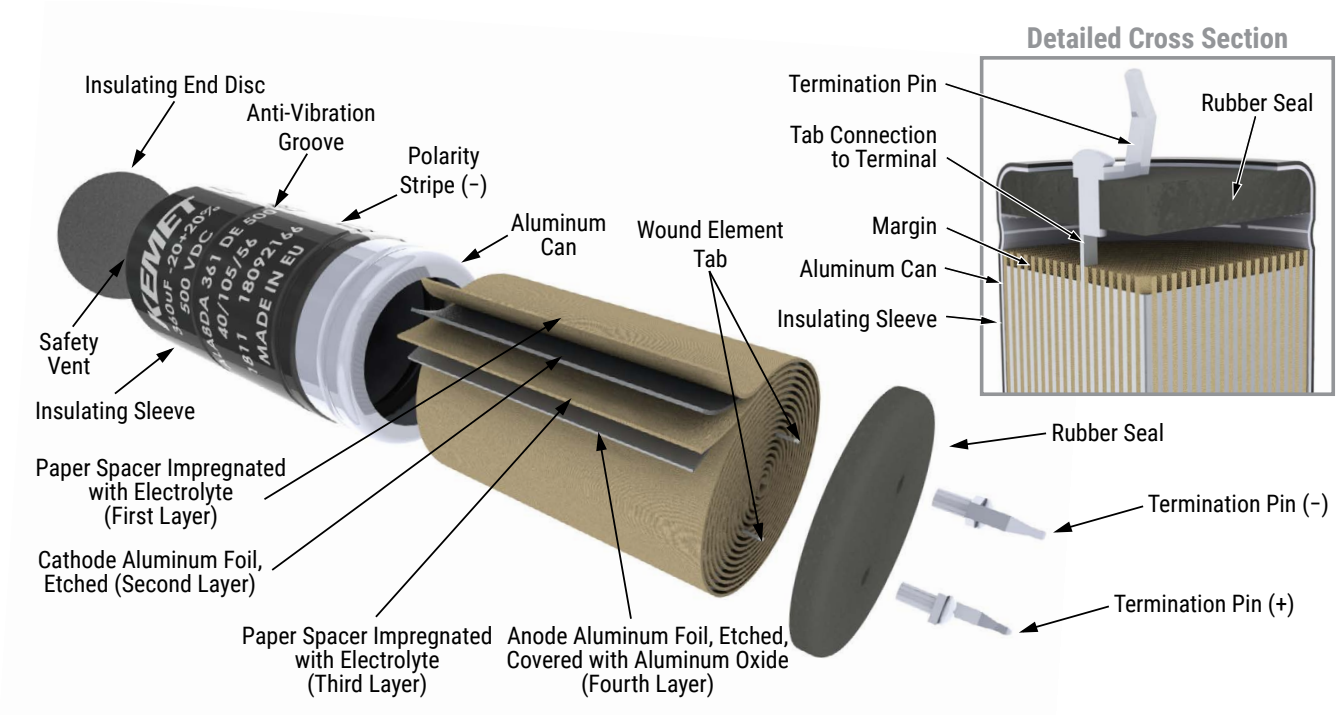

Construction Data

The manufacturing process begins with the anode foil being electrochemically etched to increase the surface area and then "formed" to produce the aluminum oxide layer. Both the anode and cathode foils are then interleaved with absorbent paper and wound into a cylinder. During the winding process, aluminum tabs are attached to each foil to provide the electrical contact.

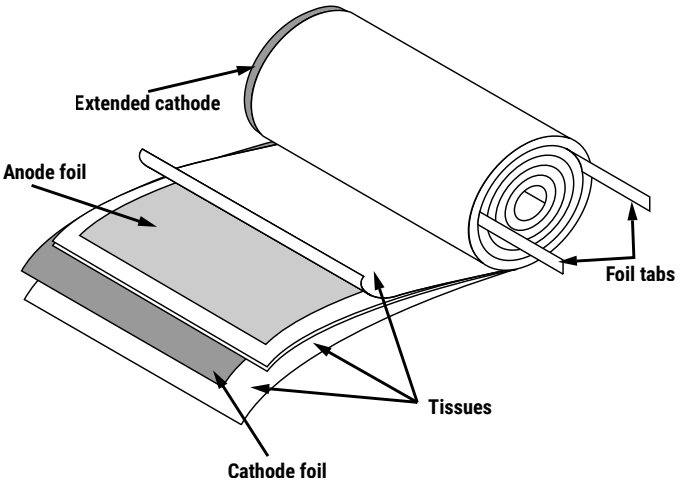

The deck, complete with terminals, is attached to the tabs and then folded down to rest on top of the winding. The complete winding is impregnated with electrolyte before being housed in a suitable container, usually an aluminum can, and sealed. Throughout the process, all materials inside the housing must be maintained at the highest purity and be compatible with the electrolyte.

Each capacitor is aged and tested before being sleeved and packed. The purpose of aging is to repair any damage in the oxide layer and thus reduce the leakage current to a very low level. Aging is normally carried out at the rated temperature of the capacitor and is accomplished by applying voltage to the device while carefully controlling the supply current. The process may take several hours to complete.

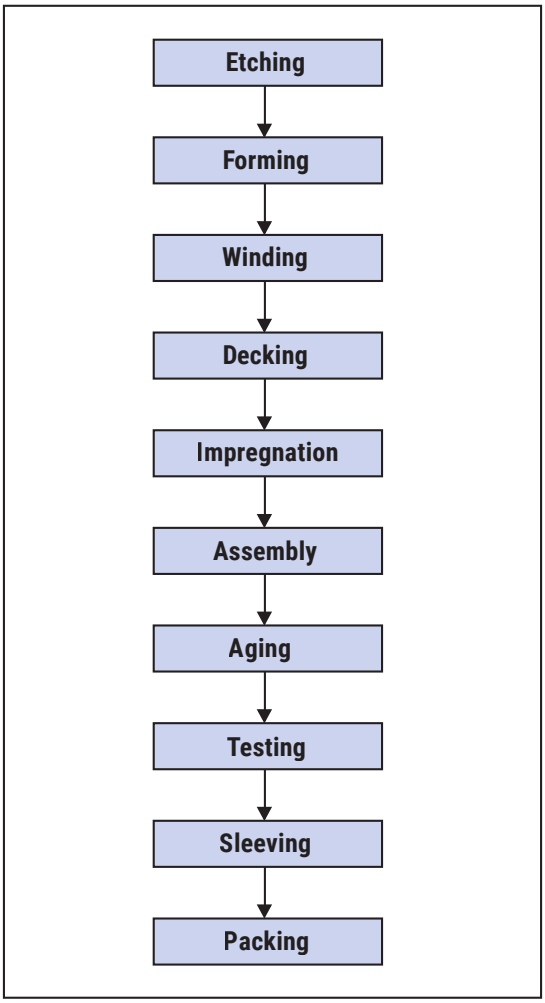

Damage to the oxide layer can occur due to variety of reasons:
- Slitting of the anode foil after forming
- Attaching the tabs to the anode foil
- Minor mechanical damage caused during winding

A sample from each batch is taken by the quality department after completion of the production process. This sample size is controlled by the use of recognized sampling tables defined in BS 6001.

The following tests are applied and may be varied at the request of the customer. In this case the batch, or special procedure, will determine the course of action.

Electrical:
- Leakage current
- Capacitance
- ESR
- Impedance
- Tan Delta

Mechanical/Visual:
- Overall dimensions
- Torque test of mounting stud
- Print detail
- Box labels
- Packaging, including packed quantity

KEMET Electronics Corporation Sales Offices

For a complete list of our global sales offices, please visit www.kemet.com/sales.

Disclaimer

YAGEO Corporation and its affiliates do not recommend the use of commercial or automotive grade products for high reliability applications or manned space flight.

All product specifications, statements, information and data (collectively, the "Information") in this datasheet are subject to change. The customer is responsible for checking and verifying the extent to which the Information contained in this publication is applicable to an order at the time the order is placed. All Information given herein is believed to be accurate and reliable, but it is presented without guarantee, warranty, or responsibility of any kind, expressed or implied.

Statements of suitability for certain applications are based on KEMET Electronics Corporation's ("KEMET") knowledge of typical operating conditions for such applications, but are not intended to constitute – and KEMET specifically disclaims – any warranty concerning suitability for a specific customer application or use. The Information is intended for use only by customers who have the requisite experience and capability to determine the correct products for their application. Any technical advice inferred from this Information or otherwise provided by KEMET with reference to the use of KEMET's products is given gratis, and KEMET assumes no obligation or liability for the advice given or results obtained.

Although KEMET designs and manufactures its products to the most stringent quality and safety standards, given the current state of the art, isolated component failures may still occur. Accordingly, customer applications which require a high degree of reliability or safety should employ suitable designs or other safeguards (such as installation of protective circuitry or redundancies) in order to ensure that the failure of an electrical component does not result in a risk of personal injury or property damage.

Although all product–related warnings, cautions and notes must be observed, the customer should not assume that all safety measures are indicated or that other measures may not be required.

KEMET requires its products to be packaged and shipped on pallets. This is because KEMET's products are specifically designed to be packed onto pallets during shipment. If for any reason, the products are removed from pallets by the shipping party and shipped to the end customer, then additional external protection is required. In this instance, an external box with two carton layers and an upwards orientation sticker must be used by the shipping party, with the empty space filled with filling material, and afterwards sealing the box. If this packing and packaging guideline is not followed by the shipping party, the shipping party, and not KEMET, will be held responsible for any packaging, packing and/or product damages upon delivery of the products to the end customer. KEMET hereby disclaims any liability for damages to the products or otherwise that have been, or threaten to be, inflicted, result from or are in any way related to the packaging, packing or damage by the shipping party in contravention of the packing and packaging guidelines herein.

KEMET is a registered trademark of KEMET Electronics Corporation.