MS/MD, +60°C/+70°C

Overview

KEMET's MS/MD Series of aluminum electrolytic capacitors are designed for intermittent duty only and capable of withstanding the AC voltage applied to the motor during starting. The capacitor construction is comprised of either double anode or O-style (double anode and floating cathode) windings, which are housed in a molded plastic case. KEMET's MD Series is VDE approved to IEC 60252–2 for the defined ratings.

Applications

KEMET's MS/MD capacitors are a range of aluminium electrolytic capacitors specifically designed for AC operation which helps to start the motor by providing a leading current to the auxiliary winding. The capacitor is not permanently connected to the winding of the motor and is usually switched off automatically after starting.

Benefits

- Intermittent AC motor starting
- 6.3 mm double amp tags (quick connect types)
- VDE approved to IEC 60252–2

Part Number System

080	MS	12	AA	M	A	1	STD
Capacitance Code (µF)	Rating	Rated Voltage (VAC)	Size Code	Manufacturing Style	Capacitance Tolerance	Terminal Code	Version
Example: 080 = 80 µF 120 = 120 µF	MS = Motor start single rating MD = Motor start dual rating	12 = 120 22 = 220 26 = 260	See Dimension Table	M = Molded case	A = −0% +25% K = ±10%	1 = Double amp tag	STD = Standard

© KEMET Electronics Corporation • One East Broward Boulevard
Fort Lauderdale, FL 33301 USA • 954-766-2800 • www.kemet.com

Performance Characteristics

Item	Performance Characteristics	
Series	MD (Dual voltage rating)	MS (Single voltage rating)
Capacitance Range	25 – 750 µF	25 – 750 µF
Rated Voltage	120 – 360 VAC 50 Hz	120 – 260 VAC 50 Hz
Operating Temperature	−20°C to +70°C	−20°C to +60°C
Capacitance Tolerance	±10%, −0% +25%	±10%, −0% +25%
Operational Lifetime	500 hours at +70°C, 1.1 V_R (specified duty cycle)	500 hours at +60°C, 1.1 V_R (specified duty cycle)
Shelf Life	2 years	2 years
Standards	IEC 60252–2: AC Motor Capacitors - Part 2: Motor Start Capacitors	

VDE Approvals to IEC 60252–2

Rated Voltage	220 V	260 V
Capacitor Type	MD	MD
Capacitance (µF)	(Note 1)	(Note 2)
30	AA	
40	AA AB	AB
50	AA AB	AB
60	AA AB	AB
70	AB	AB
80	AB AC	AB
90	AC	AC
100	AC	AC
120	AC	AC
125	AC	AC

Note 1: Duty cycles approved
220 V at SD = 3 & ED = 1.7%
300 V at SD = 1 & ED = 0.1%

Note 2: Duty cycles approved
260 V at SD = 3 and ED = 1.7% (40 – 125 µF)
330 v at SD = 1 and ED = 0.55% (40 – 125 µF)
360 v at SD = 1 and ED = 0.33% (90 – 125 µF)

General approval notes:
- *Valid for both ±10% and −0+25% tolerance.*
- *Valid for intermediate capacitance. Values in increments of 1 µF between 30 µF and 100 µF, and in increments of 5 µF between 100 µF and 125 µF.*
- *Approved duty cycles relate to 50 Hz, as per section 3.1.12.2 of IEC60252–2 operation at 60 Hz is also approved if the relative operation time is reduced by 20%. For example a 50 Hz duty cycle with ED = 1.7% is also approved for 60 Hz with ED = 1.36%.*

Dimensions – Millimeters

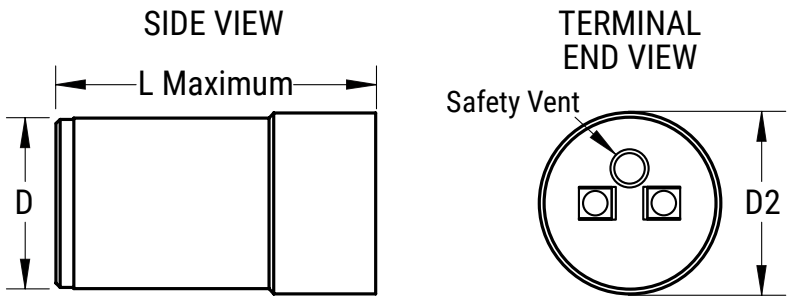

Size Code	Dimensions in mm		
	D	D2	L
	±0.5	±0.5	Maximum
AA	38	39	75
AB	38	39	90
AC	38	39	116

Power Factor

The tangent of the loss angle for motor start capacitors shall not exceed 0.1 and shall be calculated as follows:

$$\text{Tan } \delta = \frac{W}{V \times I} = \frac{\text{true watts}}{\text{apparent watts}}$$

Duty Cycle

The standard rating is 1.67% or 1/60th full time and corresponds to a maximum duty of 20 starts, each of three seconds duration per hour. It is expressed as 3/1.67 (a 3 minute cycle with 1.67% duration during which the capacitor may be energized). If the same capacitor is to be used for a duty cycle of 60 starts per hour the cycle duration will be 1 minute. The operation time per cycle will then have to be reduced to 1.67% of 1 minute (i.e. 1 second). Alternative duty cycles are available on request.

Presence of Run Capacitor

When the motor is fitted with both starting and run capacitors, consideration should be given to fitting of the appropriate discharge resistor to the starting capacitor. This is to protect the run capacitor from damage through discharge of the starting capacitor.

Container Form

Cylindrical mouldings, meeting creepage and clearance distances, according to IEC 60335–1 and flammability ratings according to UL94–V1.

Dimensions – Millimeters cont.

Discharge Resistors

A discharge resistor may be fitted to a motor start capacitor to prevent electrical overstress of the capacitor and/or for safety reasons. In accordance with IEC 60252, the resistor value should be such that it reduces the voltage on the capacitor, from the line voltage to less than 50 V within 60 seconds. The resistor value may be approximated as follows: R(kOhms) = T/Rated Capacitance (μF)

AC Voltage	T
120	50,000
220	32,000
260	30,000
280	28,000
330	26,000

Resistor Value (kOhms)	Wattage
5.6	2W
15	2W
33	0.5W
56	1W
82	2W
100	1W

Environmental Compliance

All Part Numbers in this datasheet are Reach and RoHS compliant and Halogen-Free.

As an environmentally conscious company, KEMET is working continuously with improvements concerning the environmental effects of both our capacitors and their production.

In Europe (RoHS Directive) and in some other geographical areas such as China, legislation has been put in place to prevent the use of some hazardous materials, such as lead (Pb), in electronic equipment. All products in this catalog are produced to help our customers' obligations to guarantee their products and fulfill these legislative requirements. The only material of concern in our products has been lead (Pb), which has been removed from all designs to fulfill the requirement of containing less than 0.1% of lead in any homogeneous material. KEMET will closely follow any changes in legislation worldwide and make any necessary changes in its products, whenever needed.

Some customer segments such as medical, military and automotive electronics may still require the use of lead in electrode coatings. To clarify the situation and distinguish products from each other, a special symbol is used on the packaging labels for RoHS compatible capacitors.

Due to customer requirements, there may appear additional markings such as lead-free (LF), or lead-free wires (LFW) on the label.

Table 1A – Ratings & Part Number Reference

VAC	Rated Capacitance		Capacitance Tolerance	Case Size	Duty Cycle		Part Number	Approval	
	Minimum (µF)	Maximum (µF)		D x L (mm)	120 V_{RMS}	150 V_{RMS}		VDE	CQC
120	25	325	−0/+25%	38 x 75	1.67%		(1)MS12AAMA1STD	-	-
120	25	360	±10%	38 x 75	1.67%		(1)MS12AAMK1STD	-	-
120	85	460	−0/+25%	38 x 90	1.67%		(1)MS12ABMA1STD	-	-
120	90	510	±10%	38 x 90	1.67%		(1)MS12ABMK1STD	-	-
120	120	670	−0/+25%	38 x 116	1.67%		(1)MS12ACMA1STD	-	-
120	130	750	±10%	38 x 116	1.67%		(1)MS12ACMK1STD	-	-
120	25	325	−0/+25%	38 x 75	1.67%	0.55%	(1)MD12AAMA1STD	-	x
120	25	360	±10%	38 x 75	1.67%	0.55%	(1)MD12AAMK1STD	-	x
120	85	460	−0/+25%	38 x 90	1.67%	0.55%	(1)MD12ABMA1STD	-	x
120	90	510	±10%	38 x 90	1.67%	0.55%	(1)MD12ABMK1STD	-	x
120	120	670	−0/+25%	38 x 116	1.67%	0.55%	(1)MD12ACMA1STD	-	x
120	130	750	±10%	38 x 116	1.67%	0.55%	(1)MD12ACMK1STD	-	x
VAC	Rated Capacitance		Capacitance Tolerance	Case Size	Duty Cycle		Part Number	VDE	CQC

(1) Insert capacitance code. Valid in increments of 1 µF between 30 µF and 100 µF, and in increments of 5 µF above 100 µF

Table 1B – Ratings & Part Number Reference

VAC	Rated Capacitance		Capacitance Tolerance	Case Size	Duty Cycle		Part Number	Approval	
	Minimum (µF)	Maximum (µF)		D x L (mm)	220 V_{RMS}	300 V_{RMS}		VDE	CQC
220	30	65	−0/+25%	38 x 75	1.67%		(1)MS22AAMA1STD	-	-
220	30	70	±10%	38 x 75	1.67%		(1)MS22AAMK1STD	-	-
220	40	90	−0/+25%	38 x 90	1.67%		(1)MS22ABMA1STD	-	-
220	40	100	±10%	38 x 90	1.67%		(1)MS22ABMK1STD	-	-
220	55	140	−0/+25%	38 x 116	1.67%		(1)MS22ACMA1STD	-	-
220	65	150	±10%	38 x 116	1.67%		(1)MS22ACMK1STD	-	-
220	30	60	−0/+25%	38 x 75	1.67%	0.10%	(1)MD22AAMA1STD	x	x
220	30	60	±10%	38 x 75	1.67%	0.10%	(1)MD22AAMK1STD	x	x
220	40	80	−0/+25%	38 x 90	1.67%	0.10%	(1)MD22ABMA1STD	x	x
220	40	80	±10%	38 x 90	1.67%	0.10%	(1)MD22ABMK1STD	x	x
220	80	125	−0/+25%	38 x 116	1.67%	0.10%	(1)MD22ACMA1STD	x	x
220	80	125	±10%	38 x 116	1.67%	0.10%	(1)MD22ACMK1STD	x	x
VAC	Rated Capacitance		Capacitance Tolerance	Case Size	Duty Cycle		Part Number	VDE	CQC

(1) Insert capacitance code. Valid in increments of 1 µF between 30 µF and 100 µF, and in increments of 5 µF above 100 µF

Table 1C – Ratings & Part Number Reference

VAC	Rated Capacitance		Capacitance Tolerance	Case Size	Duty Cycle			Part Number	Approval	
	Minimum (µF)	Maximum (µF)		D x L (mm)	260 V_{RMS}	330 V_{RMS}	360 V_{RMS}		VDE	CQC
260	25	55	−0/+25%	38 x 75	1.67%			(1)MS26AAMA1STD	-	-
260	25	60	±10%	38 x 75	1.67%			(1)MS26AAMK1STD	-	-
260	35	75	−0/+25%	38 x 90	1.67%			(1)MS26ABMA1STD	-	-
260	35	85	±10%	38 x 90	1.67%			(1)MS26ABMK1STD	-	-
260	50	110	−0/+25%	38 x 116	1.67%			(1)MS26ACMA1STD	-	-
260	55	125	±10%	38 x 116	1.67%			(1)MS26ACMK1STD	-	-
260	25	50	−0/+25%	38 x 75	1.67%	0.55%		(1)MD26AAMA1STD	x	x
260	25	55	±10%	38 x 75	1.67%	0.55%		(1)MD26AAMK1STD	x	x
260	40	80	−0/+25%	38 x 90	1.67%	0.55%		(1)MD26ABMA1STD	x	x
260	40	80	±10%	38 x 90	1.67%	0.55%		(1)MD26ABMK1STD	x	x
260	90	125	−0/+25%	38 x 116	1.67%	0.55%	0.33%	(1)MD26ACMA1STD	x	x
260	90	125	±10%	38 x 116	1.67%	0.55%	0.33%	(1)MD26ACMK1STD	x	x
VAC	Rated Capacitance		Capacitance Tolerance	Case Size	Duty Cycle			Part Number	VDE	CQC

(1) Insert capacitance code. Valid in increments of 1 µF between 30 µF and 100 µF, and in increments of 5 µF above 100 µF

Marking

Construction

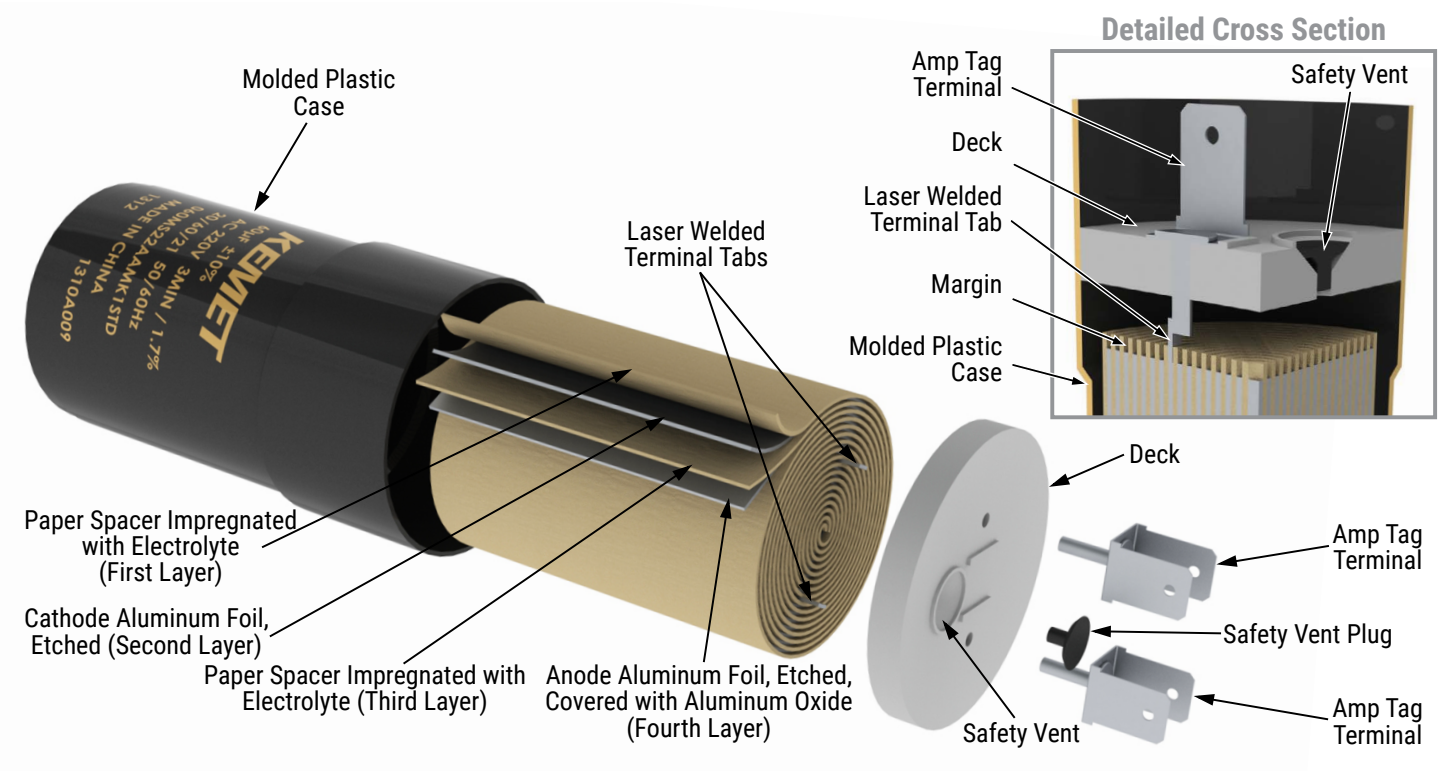

KEMET Electronics Corporation Sales Offices

For a complete list of our global sales offices, please visit www.kemet.com/sales.

Disclaimer

YAGEO Corporation and its affiliates do not recommend the use of commercial or automotive grade products for high reliability applications or manned space flight.

All product specifications, statements, information and data (collectively, the "Information") in this datasheet are subject to change. The customer is responsible for checking and verifying the extent to which the Information contained in this publication is applicable to an order at the time the order is placed. All Information given herein is believed to be accurate and reliable, but it is presented without guarantee, warranty, or responsibility of any kind, expressed or implied.

Statements of suitability for certain applications are based on KEMET Electronics Corporation's ("KEMET") knowledge of typical operating conditions for such applications, but are not intended to constitute – and KEMET specifically disclaims – any warranty concerning suitability for a specific customer application or use. The Information is intended for use only by customers who have the requisite experience and capability to determine the correct products for their application. Any technical advice inferred from this Information or otherwise provided by KEMET with reference to the use of KEMET's products is given gratis, and KEMET assumes no obligation or liability for the advice given or results obtained.

Although KEMET designs and manufactures its products to the most stringent quality and safety standards, given the current state of the art, isolated component failures may still occur. Accordingly, customer applications which require a high degree of reliability or safety should employ suitable designs or other safeguards (such as installation of protective circuitry or redundancies) in order to ensure that the failure of an electrical component does not result in a risk of personal injury or property damage.

Although all product–related warnings, cautions and notes must be observed, the customer should not assume that all safety measures are indicated or that other measures may not be required.

KEMET requires its products to be packaged and shipped on pallets. This is because KEMET's products are specifically designed to be packed onto pallets during shipment. If for any reason, the products are removed from pallets by the shipping party and shipped to the end customer, then additional external protection is required. In this instance, an external box with two carton layers and an upwards orientation sticker must be used by the shipping party, with the empty space filled with filling material, and afterwards sealing the box. If this packing and packaging guideline is not followed by the shipping party, the shipping party, and not KEMET, will be held responsible for any packaging, packing and/or product damages upon delivery of the products to the end customer. KEMET hereby disclaims any liability for damages to the products or otherwise that have been, or threaten to be, inflicted, result from or are in any way related to the packaging, packing or damage by the shipping party in contravention of the packing and packaging guidelines herein.

KEMET is a registered trademark of KEMET Electronics Corporation.